DGDR

DONGGUAN DERUI PRECISION MACHINERY CO.LTD

one-stop clamping tools supplier

PRODUCT CATALOGUE

Company Profile

Derui Precision Machinery Co. Ltd is specialized in manufacturing various of High Precision Chuck. Including two parts: Hydraulic chuck and Pneumatic Chuck. Our main products include Cylinder-Integrated Collect Chuck / Rotary Power Chuck / Expanding Mandrel / Spindle Collect Chuck/Air Diaphragm Chuck/Precision Collect Chuck/3-Jaw Diaphragm Power Chuck/Stationary Chuck etc. Our production capacity is now up to 1200 pieces per month. Our goal and core value is "saving refit cost, improving production efficiency". Providing consistently high quality products to our customer to meet or exceed the expectations of their " end-user " customers. To accomplish this, we continuously invest in our manufacturing facilities and personnel, keeping both at the leading edge of China-based manufacturing.At present, our company has established cooperative relations with many famous enterprises in China, customized various non-standard pneumatic chucks and hydraulic chucks. With our accumulated experience and expertise, the suggestion we offer to our customer will in a professional manner. More than professional, Derui will provide you with the most appropriate chucks and services. It is used for CNC machine, lathe processing, laser gear for cutting or welding.

GAL High Precision Chuck

- The accuracy of GAL/GAS collet chuck is within 0.002mm, and the clamping accuracy is within 0.005mm.
- High precision, high speed and high rigidity structure
- Inside the rotary cylinder, the air pipe can be directly connected to the side to complete the loosening and clamping
- High resistance to coolant fluid and chips penetration (under gas supply condition)
- The chuck body is precisely grind with high accuracy
- Save installation costs such as rotary cylinder, fuel tank, pull rod
- Adopting W25/16C collets

GAL specification & dimension

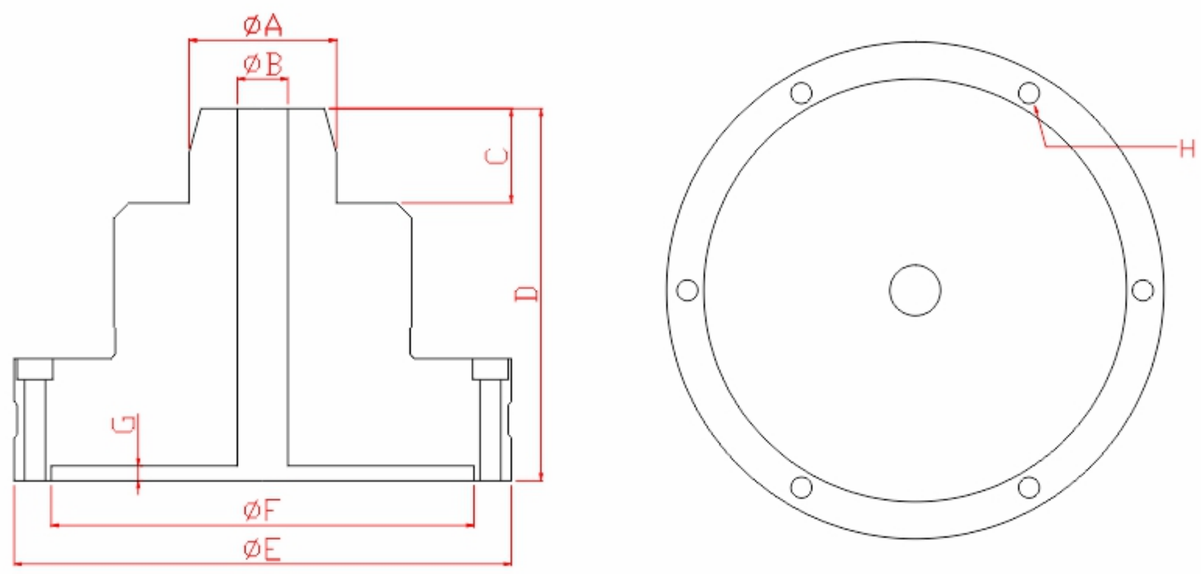

GAL Introduction

DGDR GAL / GAS back-pull precision pneumatic rotary chuck adopts cylinder front structure. It can be relaxed and clamped by direct charging. The clamping force can be adjusted by adjusting the air pressure. The accuracy of the GAL-W25/GAS-W25 high-precision pneumatic chuck is within 0.002mm, and the clamping accuracy is within 0.005mm. The accuracy of GAS-16C is 0.005, and the clamping accuracy is within 0.015mm. GAS / GAL high precision pneumatic rotary chuck is widely used in five-axis tool grinder, CNC grinder, CNC lathe and all kinds of precision special purpose machines.

GAS / GAL has been successfully used in cutting tools, optical parts, electronic parts, medical parts and other precision parts to improve production efficiency.

Product application case

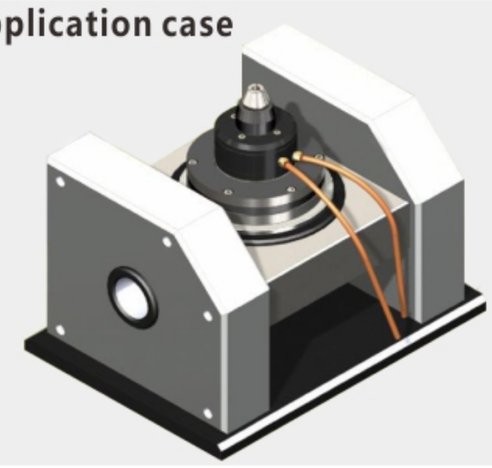

Model	GAL-W25	GAS-W25	GAS-16C
A	50	50	80
B	19mm Max through-hole	19mm Max through-hole	40mm Max through-hole
C	31	31	49
D	125	125	155
E	127	167	197
F	102	142	166
G	5	5	5
H	PCDΦ113	PCDΦ153	PCDΦ181
Screw	6H-M6*55	6H-M6*55	6H-M8*55
Collet Type	W25	W25	16C
R.P.M	500RPM	3000RPM	2000RPM
operation pressure	7KG/cm2	7KG/cm2	7KG/cm2
grapping force	1200KG/7KG	2700KG/7KG	5300KG/7KG

GA Rotary Power Chuck

- Self-contained power chuck, no need for an extra rotary actuator
- Aluminum alloy chuck body, light-weighted, good heat dispensation
- Allow non-stop operation when loading and uploading
- Widely applied to convert manual lathes into powered ones
- Expand the actuator to increase the chucking power
- Changing the jaws quickly
- Match up working for self-motion feeding material
- Force the clamp to loosen
- Notice:Avoiding the cutting fluid enter into chuck direct

GA specification & dimension

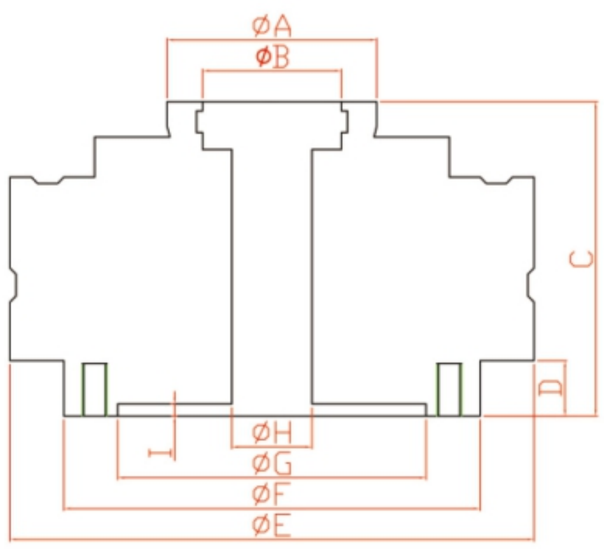

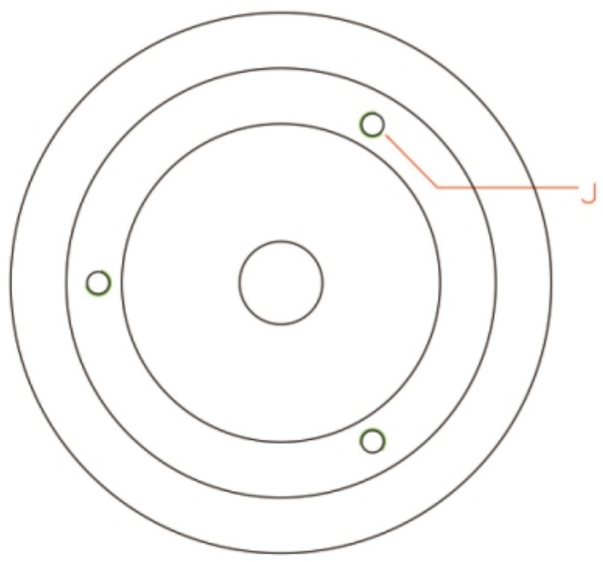

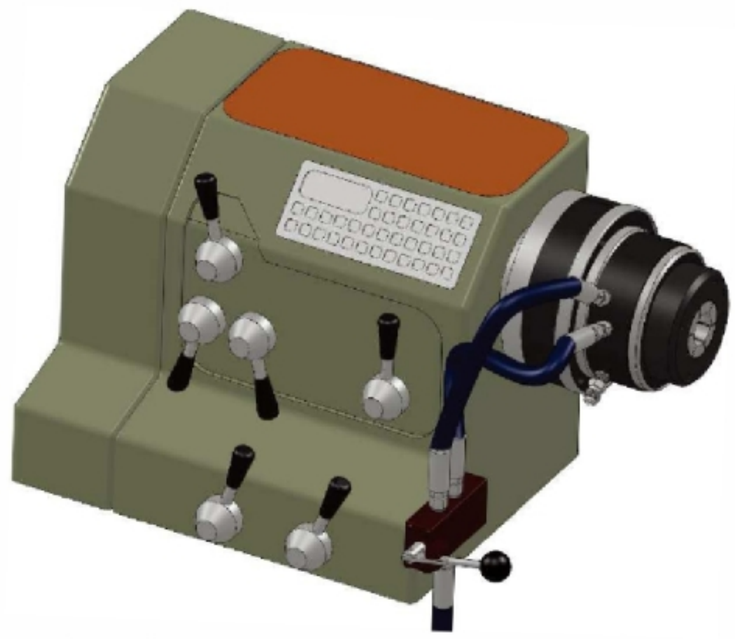

GA Introduction

It used to be complex for users to convert a manual lathe into powered one with power work-holding device since setting up a hydraulic system is quite trouble-some. DGDR GA series rotary power chuck is specially designed to help users to set up a power chuck in a low cost and easy way. With its built-in rotary actuator, the rotary power chuck can be installed and start working in less than 20 minutes.

DGDR rotary power chuck comes with both air chuck and hydraulic chuck models that range from small size to large one, giving users more options to choose. It is widely applied to convert manual lathes to semi-auto with power work-holding system , or is applied to build special purpose machines.

Model	GA25	GA40	GA-70
A	68	94	136
B	25	40	70
C	102	127	141
D	18	18	22
E	170	212	212
F	135	192	192
G	100	155	155
H	25mm Max through-hole	45mm Max through-hole	68mm Max through-hole
I	4	5	5
J	PCDΦ115	PCDΦ172	PCDΦ172
Open diameter	0.8mm	0.8mm	0.8mm
Screw	3H-M8 tapping length less than15mm	3H-M10 tapping length less than15mm	3H-M10 tapping length less than15mm
R.P.M	1800RPM	1600RPM	1400RPM
Operation Pressure	7KG/cm2	7KG/cm2	9.5KG/cm2
Grapping Force	2500kgf/7kg/cm2	4100kgf/7kg/cm2	6400kgf/16kg/cm2

GXL Large Stroke Rotary Power Chuck

- Self-contained power chuck, no need for an extra rotary actuator
- Easy to installing, set up working system quickly
- Allow non-stop operation when loading and uploading.
- Widely applied to convert manual lathes into powered ones
- Expand the actuator to increase the chucking power
- Changing the jaws quickly
- Match up working for self-motion feeding material
- Force the clamp to loosen
- Large open diameter up to 2.5mm
- Notice:Avoiding the cutting fluid enter into chuck direct

GXL specification & dimension

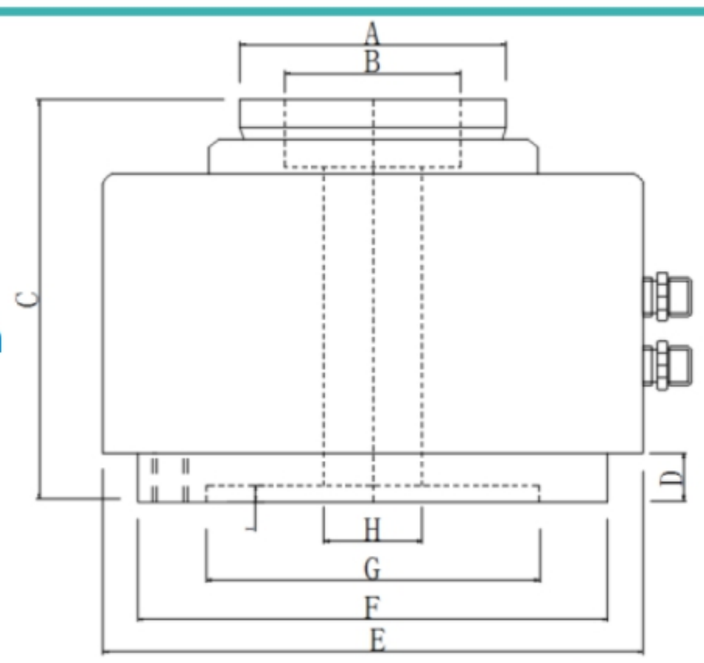

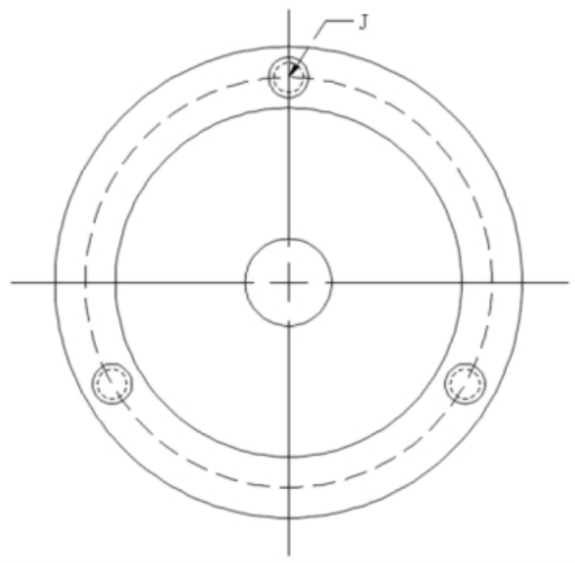

Chuck use for Laser welding

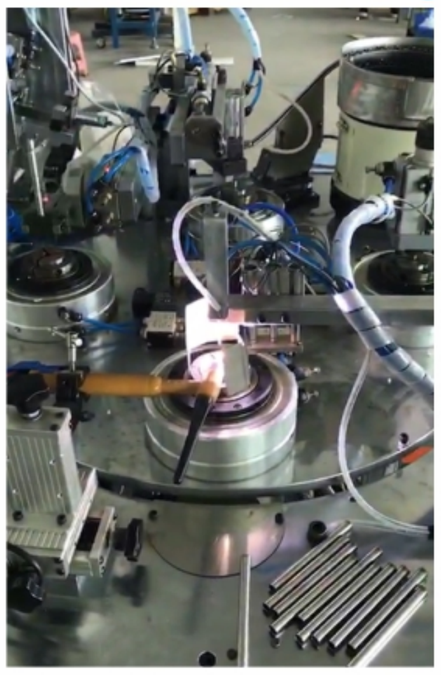

Model	GXL-25	GXL-40	GXL-50	GXL-70	GXL-90	GXL-120	GXL-150
A	68	94	106	136	136	168	207
B	25	40	50	70	90	120	150
C	105	130	133	145	155	164	200
D	18	20	20	22	20	20	30
E	170	212	192	227	247	275	325
F	135	192	192	192	232	235	325
G	100	155	155	155	190	190	230
H	25mm Max through-hole	45mm Max through-hole	42mm Max through-hole	68mm Max through-hole	88mm Max through-hole	118mm Max through-hole	148mm Max through-hole
I	4	5	5	5	6	6	6
J	PCDΦ115	PCDΦ172	PCDΦ172	PCDΦ172	PCDΦ210	PCDΦ210	PCDΦ260
Open diameter	2.5mm	2.5mm	2.5mm	2.5mm	2.5mm	2.5mm	2.5mm
Screw	3H-M8 tapping length less than15mm	3H-M10 tapping length less than15mm	3H-M10 tapping length less than15mm	3H-M10 tapping length less than15mm	3H-M12 tapping length less than15mm	3H-M12 tapping length less than15mm	3H-M12 tapping length less than15mm
R.P.M	1800RPM	1600RPM	1600RPM	1400RPM	1100RPM	900RPM	600RPM
Operation Pressure	10-20KG/cm2	10-20KG/cm2	10-20KG/cm2	10-20KG/cm2	10-15KG/cm2	10-15KG/cm2	10-15KG/cm2
Grapping Force	2058kgf/16kg/cm2	4032kgf/16kg/cm2	4032kgf/16kg/cm2	5197kgf/16kg/cm2	5193kgf/16kg/cm2	6148kgf/16kg/cm2	7200kgf/16kg/cm2

GH vice jaw high speed rotary power chuck

- Self-contained power chuck, no need for an extra rotary actuator
- Easy to installing, set up working system quickly
- Allow non-stop operation when loading and uploading
- Widely applied to convert manual lathes into powered ones
- Expand the actuator to increase the chucking power
- Changing the jaws quickly
- Match up working for self-motion feeding material
- Force the clamp to loosen
- Notice: Avoiding the cutting fluid enter into chuck directly

GH specification & dimension

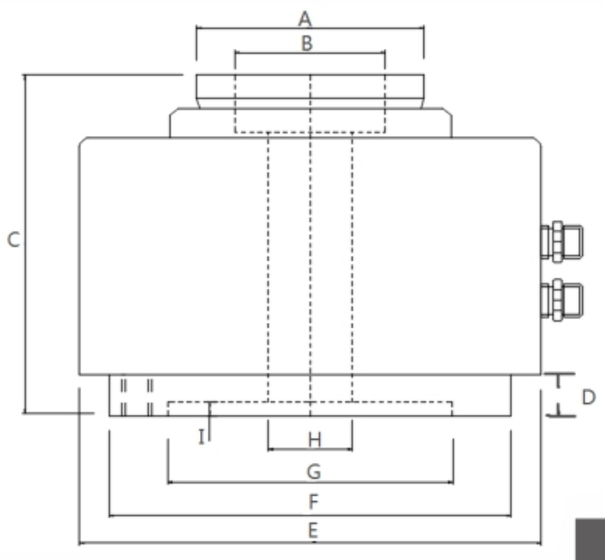

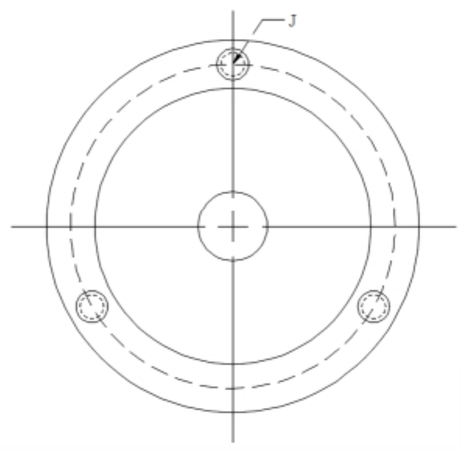

Model	GH-25	GH-40	GH-50	GH-70	GH-90	GH-120	GH-150
A	68	94	106	136	136	168	207
B	25	40	50	70	90	120	150
C	104.5	126.5	129.5	142	155	164	197
D	18	20	20	22	20	20	30
E	148	192	192	227	247	275	325
F	135	92	192	192	232	235	325
G	100	155	155	155	190	190	230
H	25mm Max through-hole	45mm Max through-hole	42mm Max through-hole	68mm Max through-hole	88mm Max through-hole	118mm Max through-hole	148mm Max through-hole
I	4	5	5	5	6	6	6
J	PCDΦ115	PCDΦ172	PCDΦ172	PCDΦ172	PCDΦ210	PCDΦ210	PCDΦ260
Open diameter	0.8mm	0.8mm	0.8mm	0.8mm	0.8mm	0.8mm	0.8mm
Screw	3H-M8 tapping length less than15mm	3H-M10 tapping length less than15mm	3H-M10 tapping length less than15mm	3H-M10 tapping length less than15mm	3H-M12 tapping length less than15mm	3H-M12 tapping length less than15mm	3H-M12 tapping length less than15mm
R.P.M	1800RPM	1600RPM	1800RPM	1400RPM	1100RPM	900RPM	900RPM
operation pressure	10-20KG/cm2	10-20KG/cm2	10-20KG/cm2	10-20KG/cm2	10-15KG/cm2	10-15KG/cm2	10-20KG/cm2
grapping force	2058kgf/7kg/cm2	4032kgf/7kg/cm2	4032kgf/7kg/cm2	5197kgf/16kg/cm²	5193kgf/16kg/cm2	6148kgf/16kg/cm²	7200kgf/16kg/cm²

Using for laser cutting machine

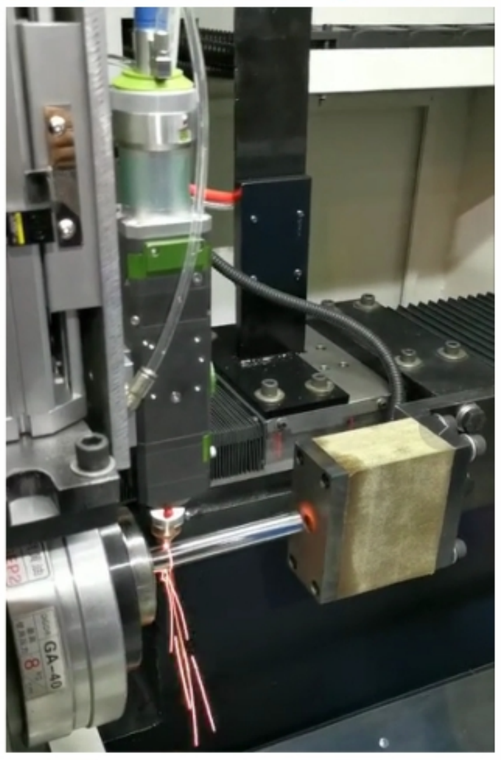

JAC High Speed Rotary Chuck

- JAC series is a small rotary air chuck, with small size , saving space
- JAC Precision collet chuck with inner rotary air cylinder
- No need to install an extra cylinder, draw tube or an air feeder, saving facility costing
- Max outer diameter is 102MM, the clamping of though-hole is 15MM
- Max R.P.M is 3500RPM
- Using YB-15 Chuck models, forcing clamping to loosen, feeding material smoothly
- No displacement when clamp the work-piece
- Max operation pressure is 3-8KG
- With semi-tight design, highly dustproof and waterproof
- Notice: Avoiding the cutting fluid enter into chuck direct

JAC-15 dimension & specification

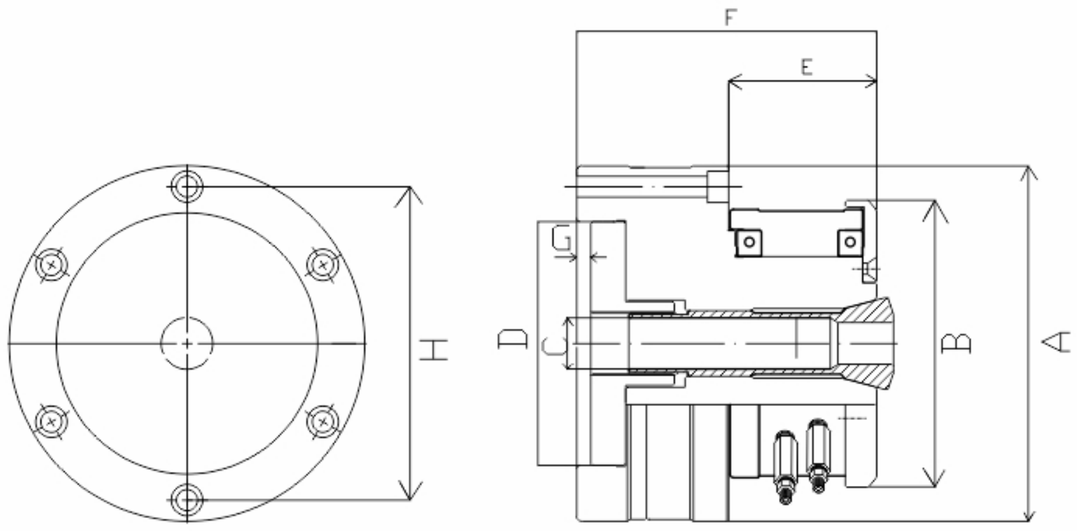

JAC dimension & specification

JAC-25/JAC-5C/JAC-16C

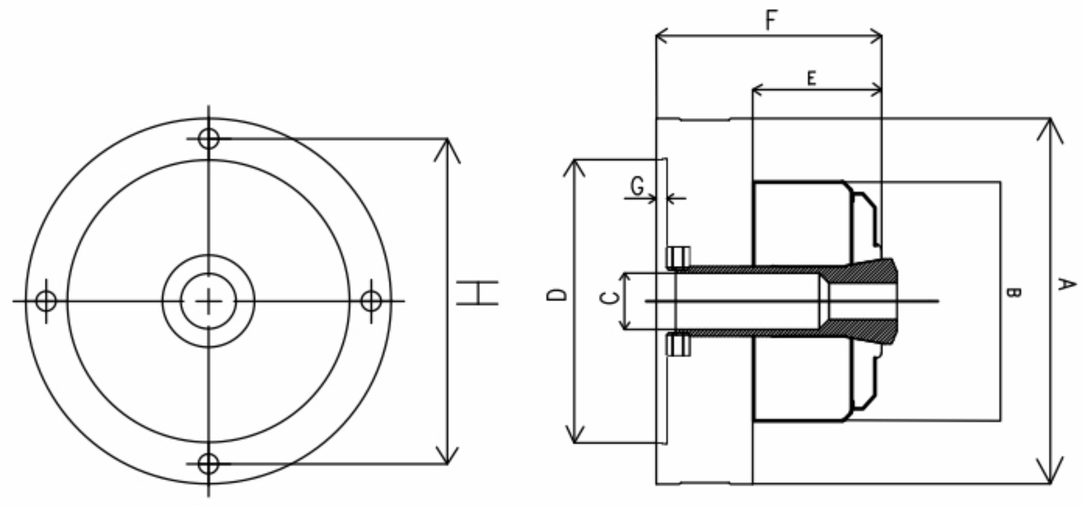

JAC Introduction

JAC SERIES cylinder-integrated Air Collet Chuck provides you with irreplaceable convenience to set up your power collet chuck system. JAC Collet Chuck integrates itself a high speed rotary cylinder, saving you from installing an extra cylinder, a drawtube or an air feeder. With its real front-mounting design, the installation for a power collet chuck system is revolutionarily easier than ever.

Model	JAC-15	JAC-25	JAC-5C	JAC-16C
A	102	168	168	187
B	88.5	110	110	127
C	16	26	26	40
D	70	130	130	150
E	42.5	71	60	65
F	90	116	105	117
G	4	5	5	5
H	90	147	147	170
Screw	6H-M5	4H-M8	4H-M8	4H-M8
Collet Type	YB-15	YB-25	5C	16C
R.P.M	4000RPM	3000RPM	3000RPM	2500RPM
operation pressure	3-8KG	3-8KG	3-8KG	3-8KG

Cyliner-Integrated Collet Chuck

DTG High Precision Chuck

- Double-angle principle allows for fast loading or uploading of components
- Hgih precision expanding mandrel, the repeatability accuracy is within 0.015mm
- Large expansion range up to 0.8mm
- Greater holding power by applying pressure evenly alongthe length of the sleeve
- 0.013mmT.I.R accuracy
- OEM/ODM is highly welcomed

Introduction

DTG expanding mandrel usually use for CNC lathe, grinding machine, milling machine, or same machine with special usage. DTG series can provide a large, balance and stable clamping force with double-angle design. Standard option is suitable for through-hold work-piece. Special option is blind-hole work-piece.

dimension & specification

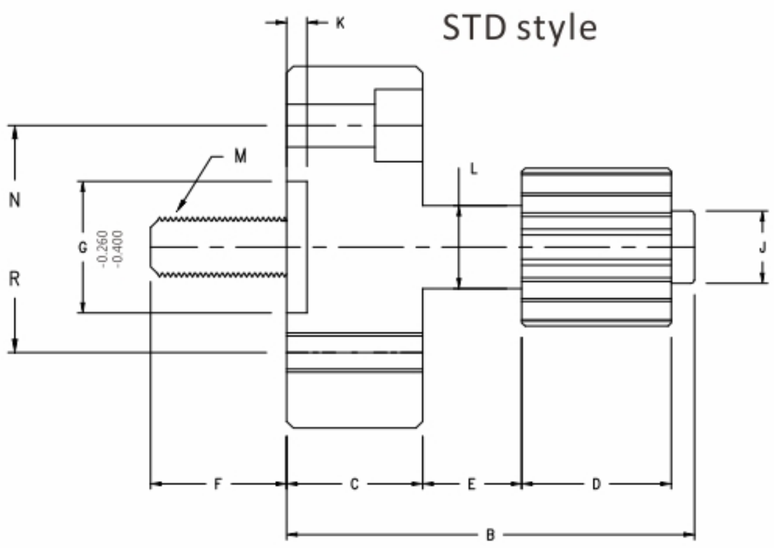

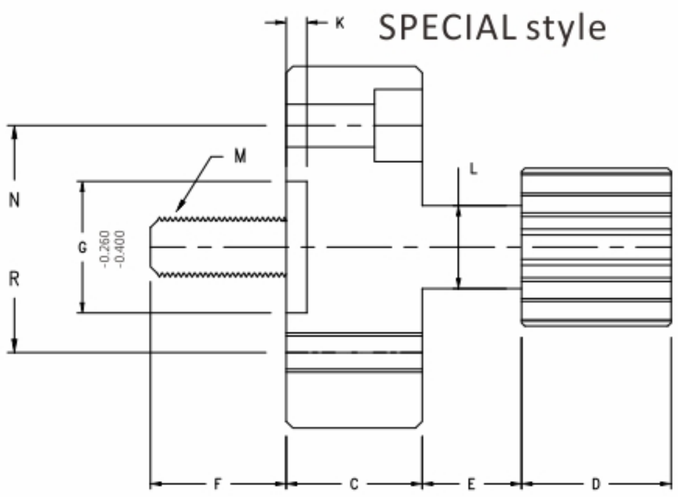

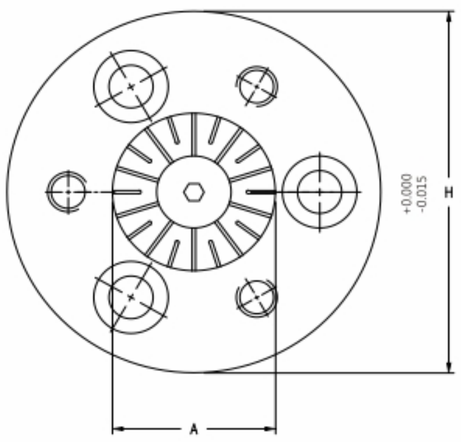

STD style	3A1	2C1	1C1	18C1	4C1	5C1	6C1	7C1	8C1
A	Min : 12.5 Max: 16.0	Min : 16.0 Max: 22.0	Min : 22.0 Max: 28.5	Min : 28.5 Max: 41.0	Min : 41.0 Max: 63.5	Min : 63.5 Max: 76.2	Min : 76.2 Max: 89.0	Min : 89.0 Max: 130.0	Min : 130.0 Max: 178.0
B	60	66	72	79	84	109	118	133	153
C	20	20	20	20	20	25	25	30	30
D	22.0	27.0	32.0	38.0	43.0	51.0	57.0	63.5	79.5
E	14.6	15.0	15.5	15.3	14.8	25.3	24.7	25.2	24.6
F	20	22	30	31	36	36	37	47	22
G	40	40	40	40	40	60	60	100	100
H	75	75	75	75	75	120	120	180	180
J	11.0	15.0	20.0	26.5	37.5	55.0	74.5	86.5	124.0
K	6	6	6	6	6	6	6	6	6
L	12.6	14.1	20.7	26.3	37.0	57.3	71.1	84.1	123.0
M (pull rod size)	M4	M8	M8	M10	M12	M20	M20	M24	M36
N (installed Screw)	Ø58-M8	Ø58-M8	Ø58-M8	Ø58-M8	Ø58-M8	Ø94-M10	Ø94-M10	Ø150-M12	Ø150-M12
R (fixed screw)	Ø28-M4	Ø28-M4	Ø58-M6	Ø58-M6	Ø58-M6	Ø94-M8	Ø94-M8	Ø150-M10	Ø150-M10
pull rod force	700	1000	1200	1800	2300	2800	3200	3700	5500

SPECIAL style	3A2	2C2	1C2	18C2	4C2	5C2	6C2	7C2	8C2
A	Min : 16.5 Max: 22.0	Min : 22.0 Max: 28.5	Min : 28.5 Max: 40.0	Min : 40.0 Max: 51.0	Min : 51.0 Max: 73.0	Min : 73.0 Max: 89.0	Min : 89.0 Max: 102.0	Min : 101.0 Max: 143.0	Min : 143.0 Max: 178.0
C	20	20	20	20	20	25	25	30	30
D	26.0	32.0	38.0	45.0	50.0	60.0	69.0	78.5	99.5
E	14.6	15.0	15.5	15.3	14.8	25.3	24.7	25.2	24.6
F	20	22	30	31	36	36	37	47	22
G	40	40	40	40	40	60	60	100	100
H	75	75	75	75	75	120	120	180	180
J	11.0	15.0	20.0	26.5	37.5	55.0	74.5	86.5	124.0
K	6	6	6	6	6	6	6	6	6
L	12.6	14.1	20.7	26.3	37.0	57.3	71.1	84.1	123.0
M (pull rod size)	M4	M8	M8	M10	M12	M20	M20	M24	M36
N (installed Screw)	Ø58-M8	Ø58-M8	Ø58-M8	Ø58-M8	Ø58-M8	Ø94-M10	Ø94-M10	Ø150-M12	Ø150-M12
R (fixed screw)	Ø28-M4	Ø28-M4	Ø58-M6	Ø58-M6	Ø58-M6	Ø94-M8	Ø94-M8	Ø150-M10	Ø150-M10
pull rod force	700	1000	1200	1800	2300	2800	3200	3700	5500

DEA Expanding Mandrel

Derui DEA Pneumatic Rotary expanding mandrel chuck with front-mounted. Connected with air line on side can finish clamping and loosen. DEA pneumatic chuck is easy installing, no need to install an extra air or oil cylinder. Accuracy within 0.01mm, clamping repeatability accuracy within 0.02mm, expanding diameter range from 8mm to 60mm (less than 16mm belong to special design). Different work-piece change the collet only, use same pedestal. OEM/ODM design is highly welcomed.

For CNC control lathe, Testing equipment

OEM/ODM is highly welcomed

Pedestal

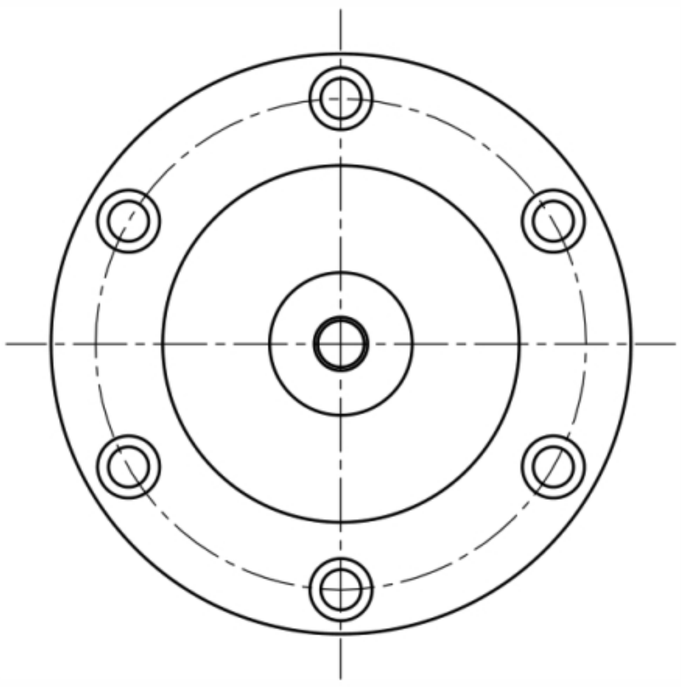

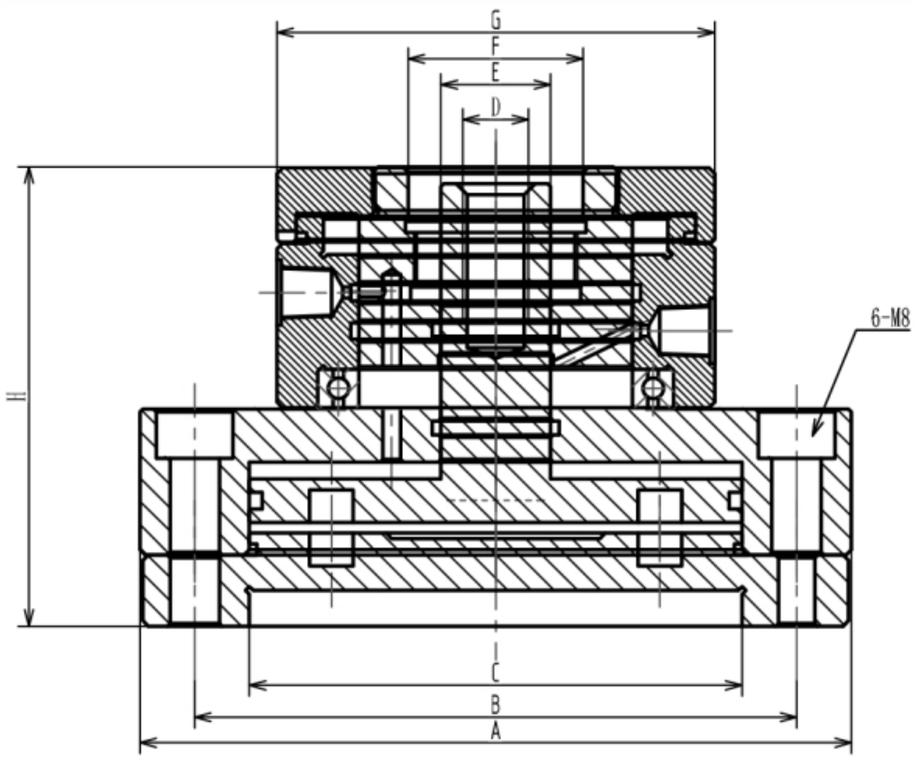

Collet

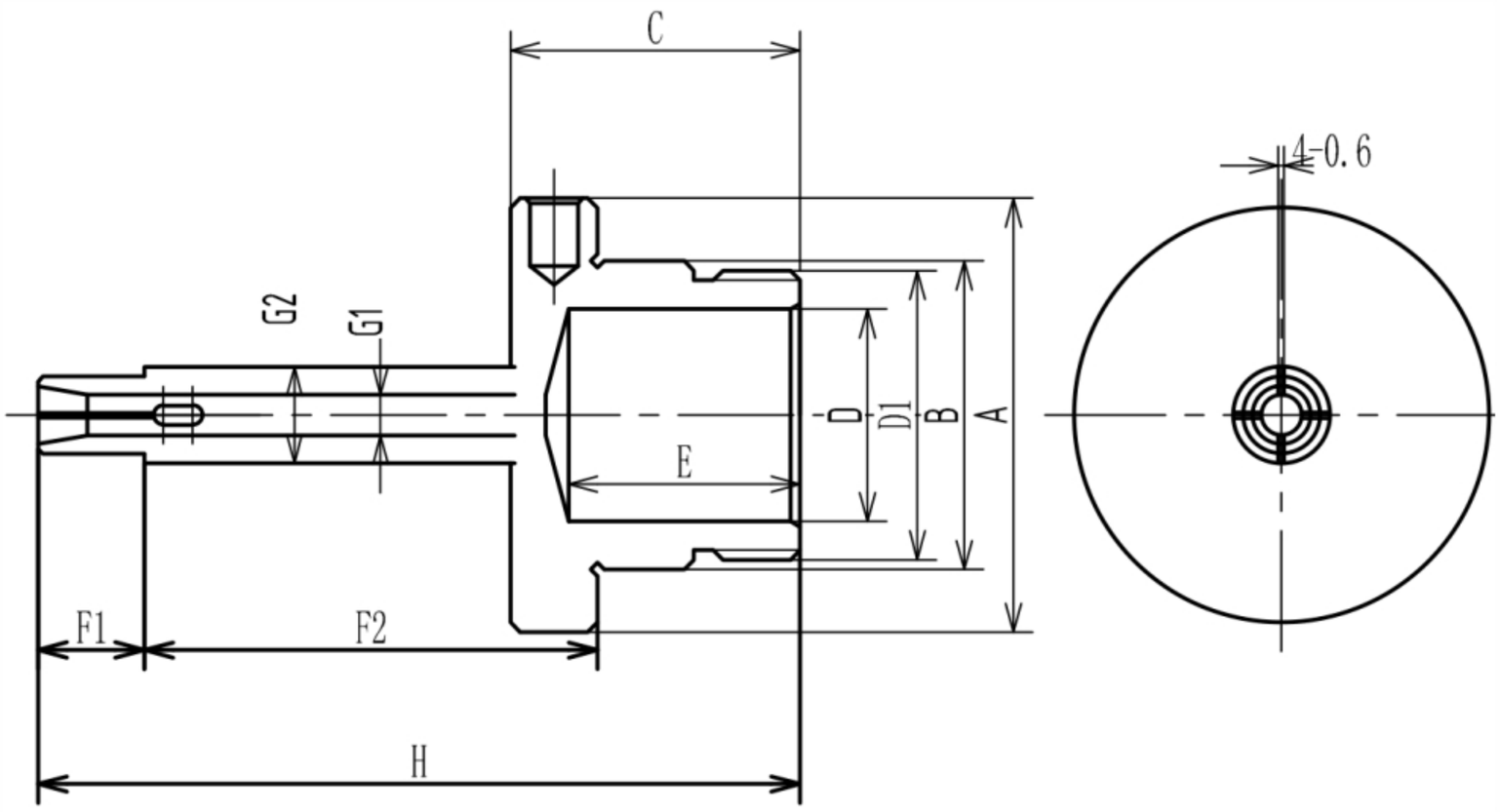

pedestal	A	B	C	D	E	F	G	H
MM	130	110	90	M12	20	32	80	84

collet	A	B	C	D	D1	E	F1	F2	G1	G2	H
MM	45	32	30	22	M30*1-6H	24	11	60	4.2	10	92

DAC BACK-PULLED EXPANDING MANDREL

ODM/OEM is highly welcomed

- Gripping length can according to customer's request
- Hgih precision
- Large clamping force
- Completed a one-time processing at both-end

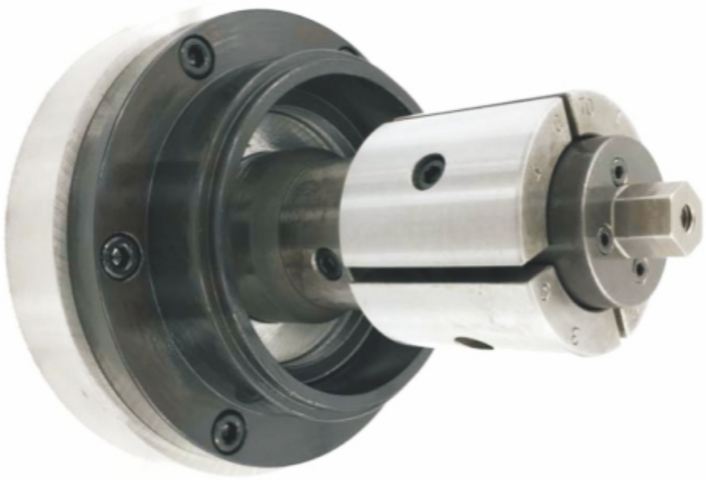

DAC-50 ID size designed by customer's request

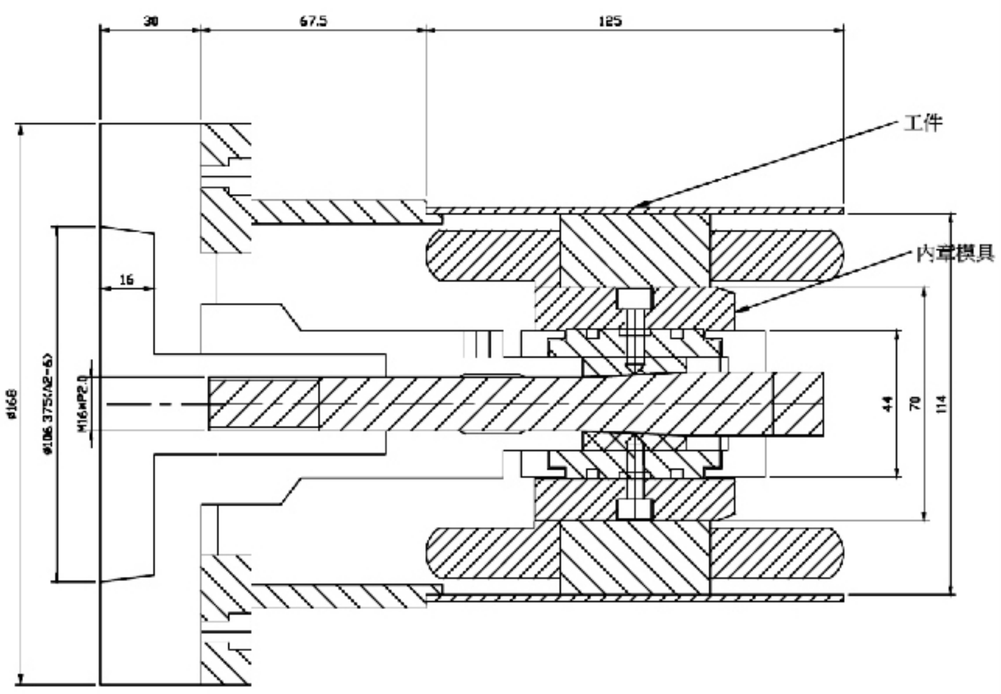

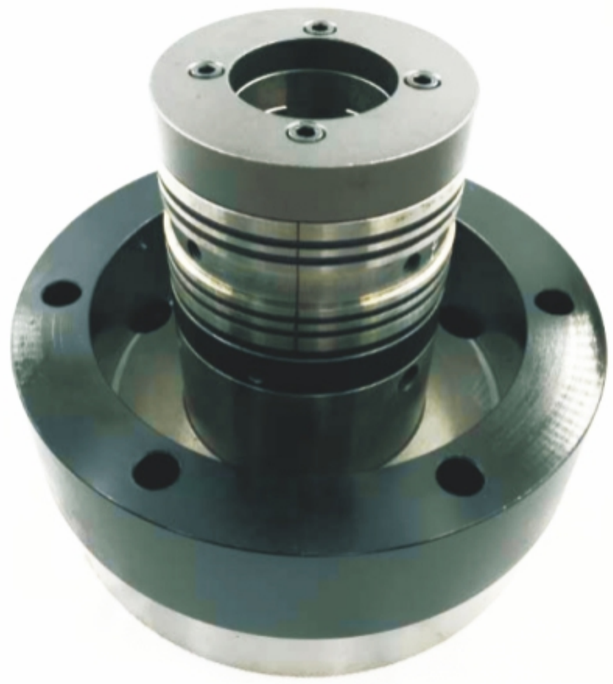

DAC-120 ID size designed by customer's request

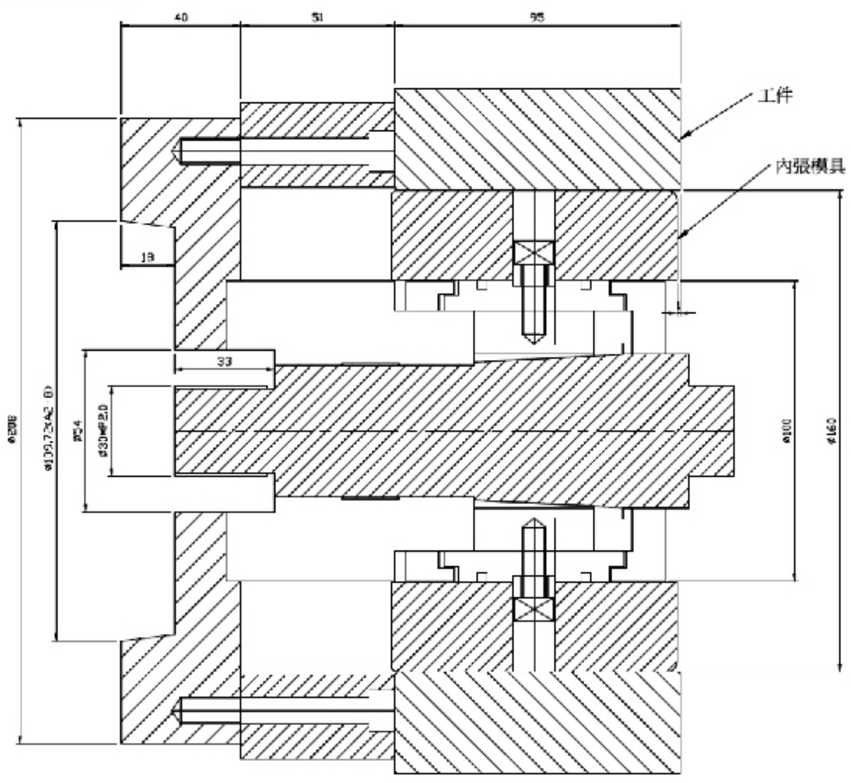

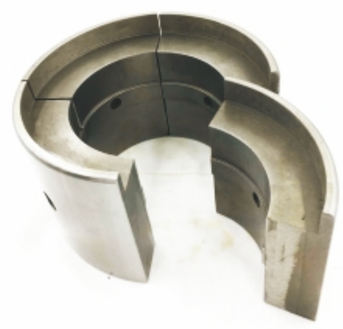

Model	DAC-50	DAC-70	DAC-80	DAC-120
Clamping range (MM)	56-90	74-110	80-140	120-180
Connection specification	A5/A6	A5/A6	A5/A6	A5/A6/A8

DAS-40 ODM/OEM is highly welcomed

- Clamping the work-piece with back-pulled
- Both-end of chuck have location hole
- Hgih precision gripping, the repeatability accuracy is within 0.01mm
- Using for tapping machine, milling machine

DAS-40 FRONT ID size designed by customer's request

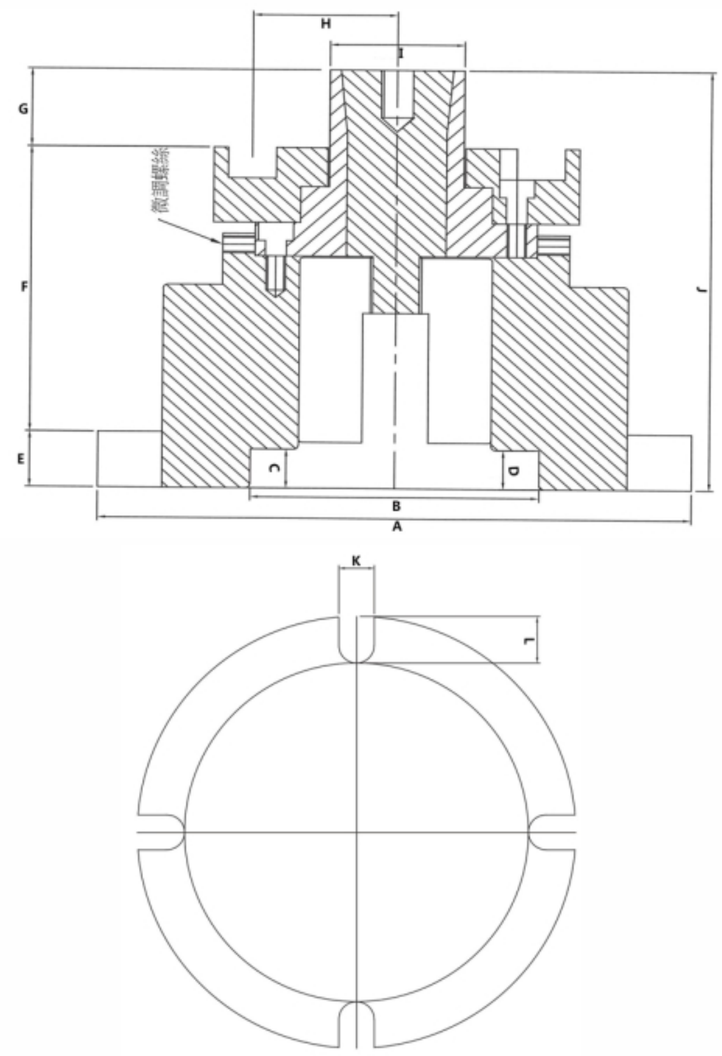

pedestal	A	B	C	D	E	F	G	H	I	J	K	L
DAS-40	185	90	14	14	20	102.5	28	45	42.15	150.5	15	20

CHI-44 Fount-mounted stationary expanding chuck

- Clamping work-piece with front-mounted
- There is no phenomenon of displacement when holding the work-piece
- Can be adjust according to the length of the work-piece
- Widely using for tapping machine
- The expanding collet can be designed for customer's request.

CHI-44 Dimension

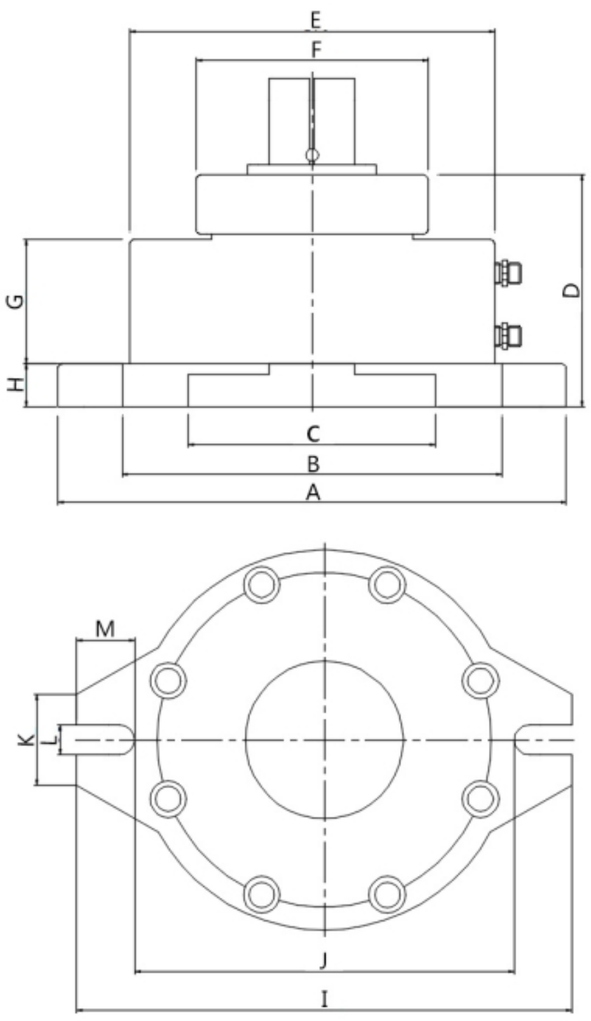

pedestal	A	B	C	D	E	F	G	H	I	J	K	L	M
CHI-44	231	177	115	108	170	100	58	20	231	177	42	14	27

JAS-T8 Stationary Mini Chuck

- High precision pneumatic chuck (back-pulled)
- Force feeding material, non-stop design
- Small size
- Body material is steel
- With high strength, light weight, long life
- Can not be used for lathe
- Waterproof and dustproof design

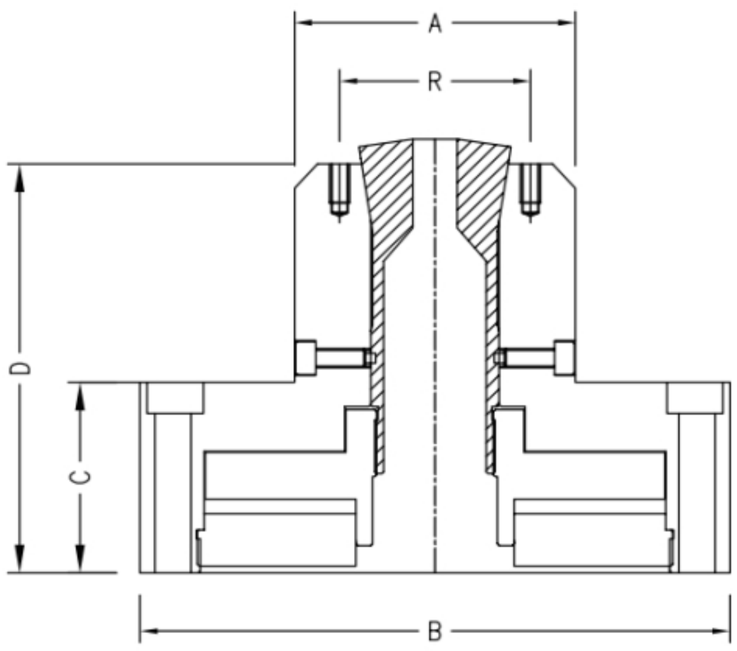

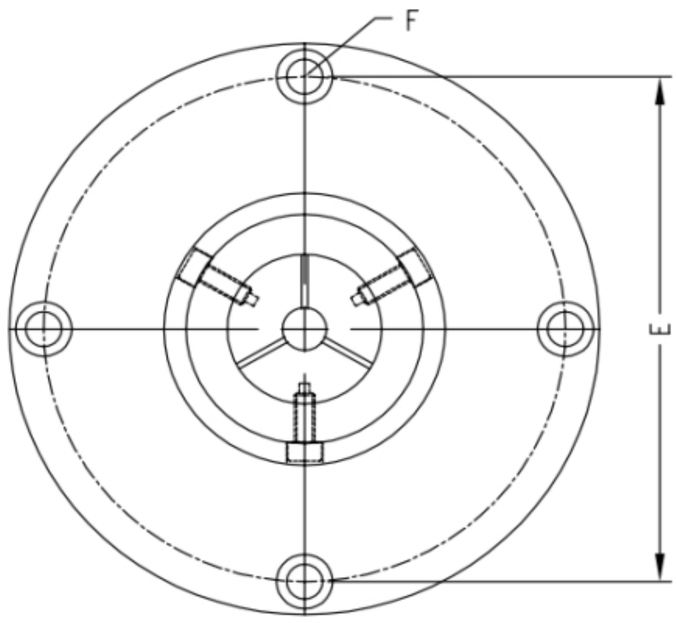

JAS-T8 Introduction

JAS-T8 is a mini pneumatic chuck with small size, easy to install, can improve the efficiency quickly, it is use for machine (except lathe) , the back-pulled design made the chuck with high precision, working stable can reduce the maintenance costing and labour cost. The chuck is high quality with waterproof and dustproof.

Item NO	JAS-T8
A	35
B	84
C	38
D	71.2
E	-
R	-
F	70
Collet Type	T8
Pressure	5-8kg/cm2
Gripping Force	350kgf
Net weight	2.8kgs

JAS/JHS Front-Mounted Chuck

- Cost effective stationary collet chuck.
- Dead length design: no axial movement.
- High accuracy. High rigidity. Long product life.
- High resistant to cutting chips, fluid or dust.
- Chuck force-opening design ensures no workpart jamming.

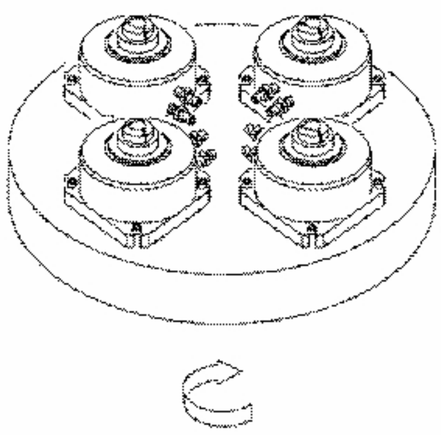

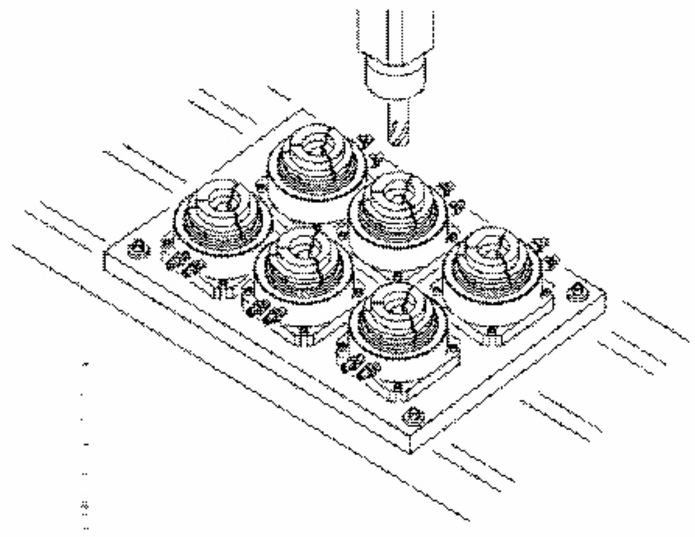

JAS/JHS Dimension and Specification

JAS-15/JAS-25/JAS-5C (Collet Style)

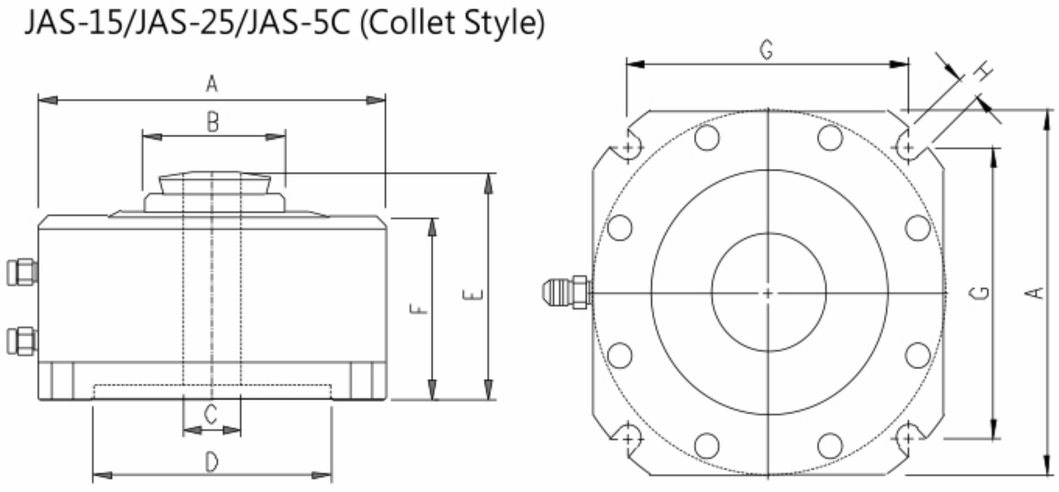

JAS-40/JHS-40/JHS-70 (Jaw Style)

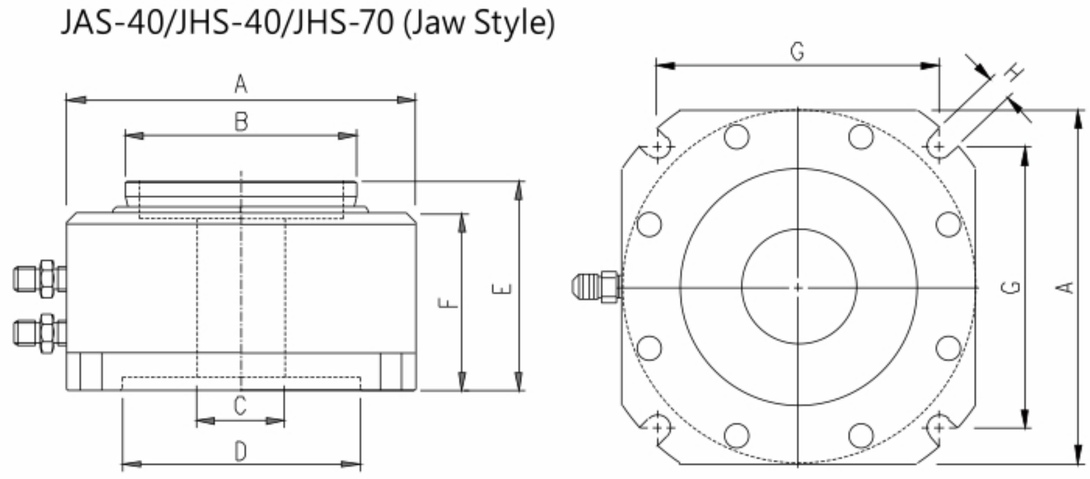

Model	JAS-15	JAS-25	JAS-5C	JAS-40	JHS-40	JHS-70
A	118 (4.65")	144 (5.67")	144 (5.67")	168 (6.61")	144 (5.67")	190 (7.48")
B	40 (1.57")	55 (2.17")	55 (2.17")	95 (3.74")	95 (3.74")	136 (5.35")
C	14 (0.55")	26 (1.02")	26 (1.02")	38 (1.50")	38 (1.50")	68 (2.68")
D	90 (3.54")	100 (3.94")	100 (3.94")	100 (3.94")	100 (3.94")	155 (6.10")
E	77 (3.03")	108 (4.25")	93 (3.66")	97 (3.82")	94 (3.70")	95 (3.73")
F	64 (2.52")	74 (2.91")	74 (2.91")	77 (3.03")	73 (2.87")	74 (2.91")
G	97 (3.82")	118 (4.65")	118 (4.65")	136.5 (5.37")	118 (4.65")	153.5 (6.04")
H	9 (0.35")	9 (0.35")	9 (0.35")	11 (0.43")	9 (0.35")	11 (0.43")
Collet / Jaw	YB-15 Collet	YB-25 Collet	5C Collet	C-40 Jaw	C-40 Jaw	C-70 Jaw
Air / Hydro	Air / Hydraulic	Air / Hydraulic	Air / Hydraulic	Air	Hydraulic	Hydraulic
Pressure	3-15kg/cm^2 (43-214psi)	3-15kg/cm^2 (43-214psi)	3-15kg/cm^2 (43-214psi)	3-8kg/cm^2 (43-114psi)	3-20kg/cm^2 (43-286psi)	3-20kg/cm^2 (43-286psi)
Max. Capacity	14mm (0.56")	26mm(1.02")	26mm(1.02")	38mm(1.50")	38mm(1.50")	68mm(2.68")
Piston Area	79cm^2 (12.2in^2)	112cm^2 (17.4in^2)	112cm^2 (17.4in^2)	240cm^2 (37.2in^2)	86cm^2 (13.3in^2)	110cm^2 (17.1in^2)
Clamping Force	2850kgf@7kg/cm^2 (6260lbf@100psi)	3890kgf@7kg/cm^2 (8550lbf@100psi)	3890kgf@7kg/cm^2 (8550lbf@100psi)	5090kgf@7kg/cm^2 (11210lbf@100psi)	5250kgf@20kg/cm^2 (11550lbf@286psi)	6780kgf@20kg/cm^2 (14920lbf@286psi)
Net Weight	5.0kgs (11.0lbs)	9.0kgs (19.8lbs)	9.0kgs (19.8lbs)	12.5kgs (27.5lbs)	8.5kgs (18.7lbs)	13.5kgs (29.7lbs)

CHM/CAM

Spindle Collet Chuck

- An integration of a rotary spindle, a power collet chuck, and an actuator
- Specially designed for double-ended machining, saving setup loading and machining time
- Accelerating the designing and building cycle of a new special purpose machine
- Compact size
- High clamping force, high rigidity
- Using for Bicycle Parts, Special machine for processing sports equipment

Introduction

Derui spindle collet chuck is designed for both ends of the work-piece processing at the same time, greatly improve the production efficiency. The body length of the chuck can be customized according to the length of the work-piece. The special-shaped work-piece can also be customized for the collet. Double-sided spindle chuck seat is installed on the lathe platform, which can be directly rotated by synchronous belt motor, reducing the time for engineers to develop and set up. CAM/CHM is widely used in auto parts, auto parts, locomotive parts, sports equipment parts, etc.

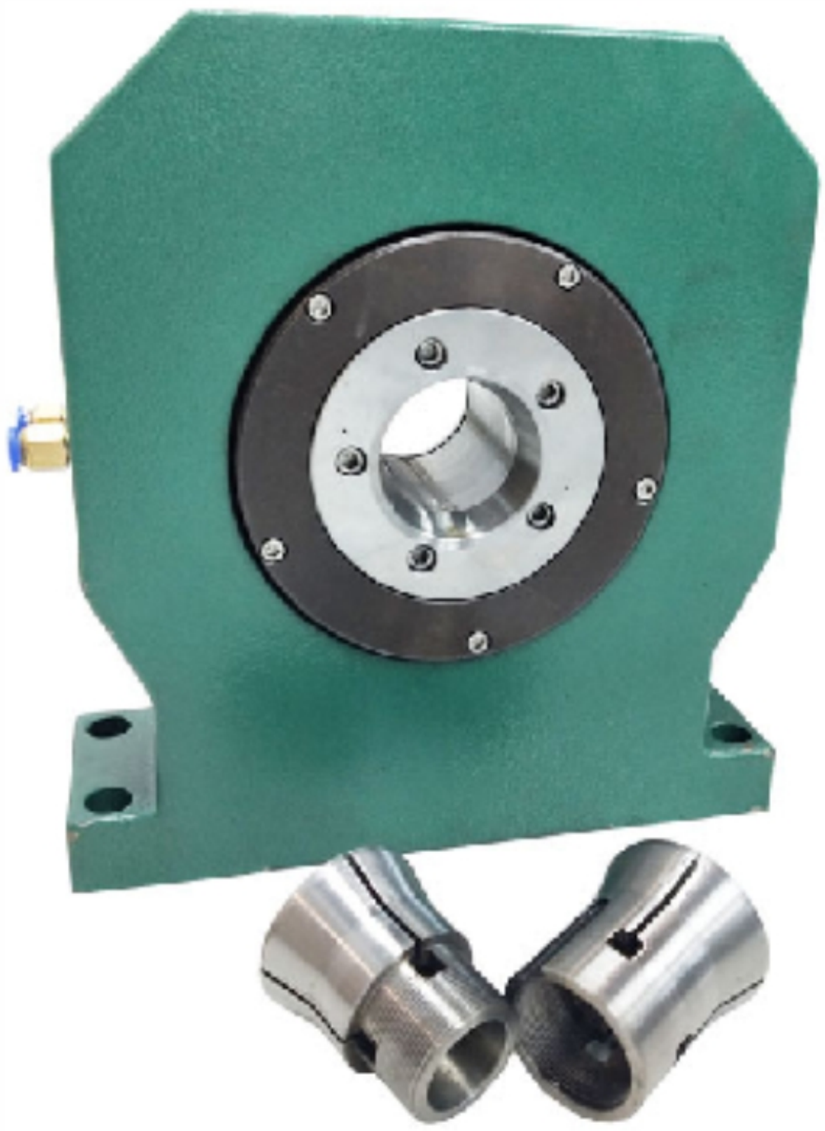

dimension & specification

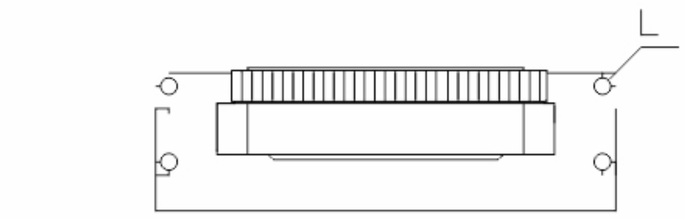

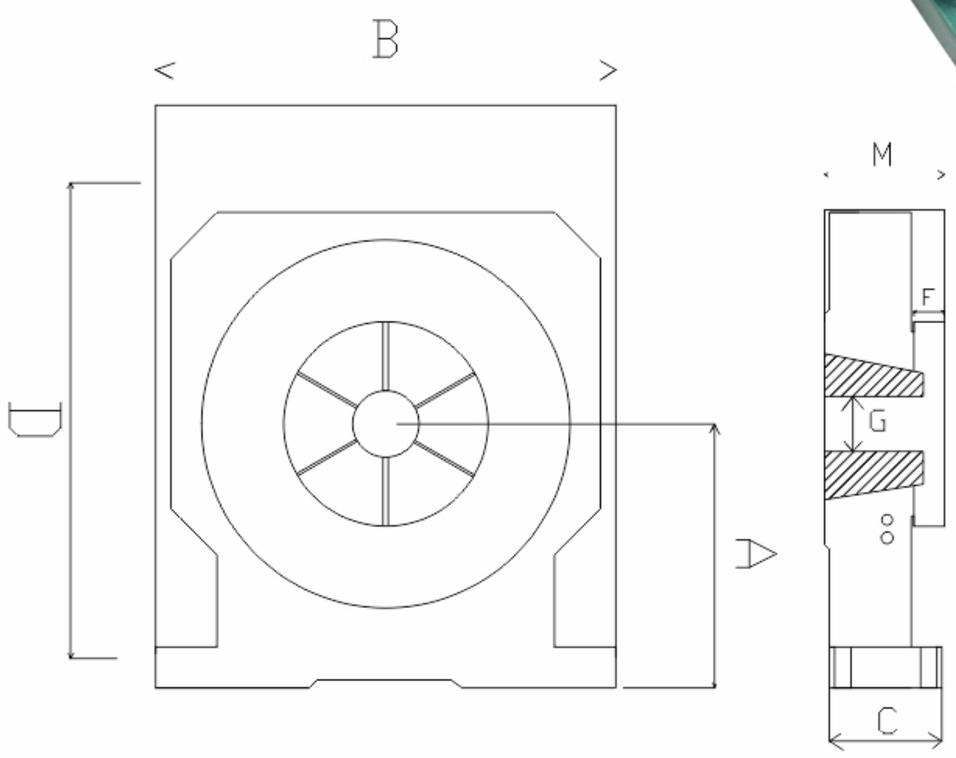

Model (Unit mm)	25	95	105B			105		110			200	
A-Center High	150	180	190	190	190	210	210	240	240	240	280	280
B-Length	260	320	350	350	350	380	380	420	420	420	490	490
C-Width	80	120	100	100	140	100	160	110	140	160	140	180
D-High	280	310	355	355	355	325	395	450	450	450	528	528
E-Operation Pressure	2-6kg	2-6kg	2-6kg	2-6kg	2-6kg	2-6kg	2-6kg	2-6kg	2-6kg	2-6kg	2-6kg	2-6kg
F-Wheel	64T×26	70T×31	96T×26	84T×26	84T×26	114T×26	96T×26	136T×32			174T×26	
G-Hold Diameter	5-25	10-40	20-80			40-100		60-150			100-200	
K-Collet	Spiral	Spiral	Spiral	Spiral	Spiral	Spiral	Spiral	Spiral	Spiral	Spiral	Spiral	Spiral
L-installation Hole	16	16	16	16	16	16	16	16	16	16	16	16
M-clamping Width	105	200	110	175	280	170	280	170	220	340	220	280

DAM Pneumatic Spindle Holder

The chuck integrates the spindle, pneumatic drive system and precision cylinder clamping system. It is a high precision spindle holder specially designed for all kinds of precision and micro parts processing. At present has been widely used in electronics, electrical appliances, mobile phones, watches and other high-precision and high-finish parts processing. The product has the advantages of small size, high precision, easy installation and convenient replacement, can be used for clamping or expanding.

DAM-15T specification & dimension

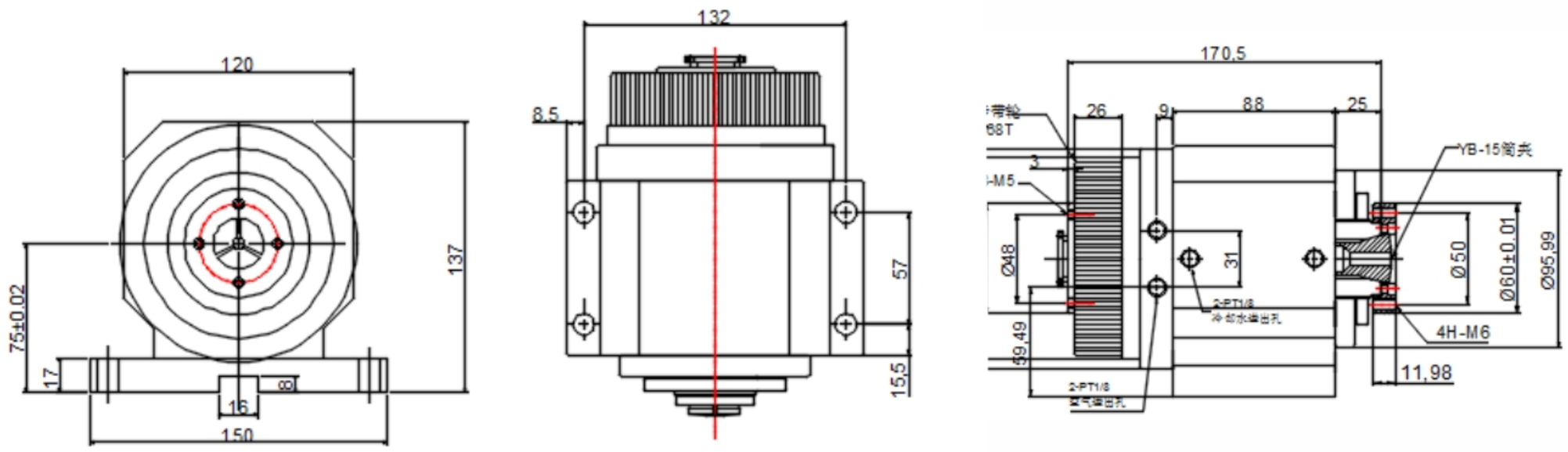

DAM-25T specification & dimension

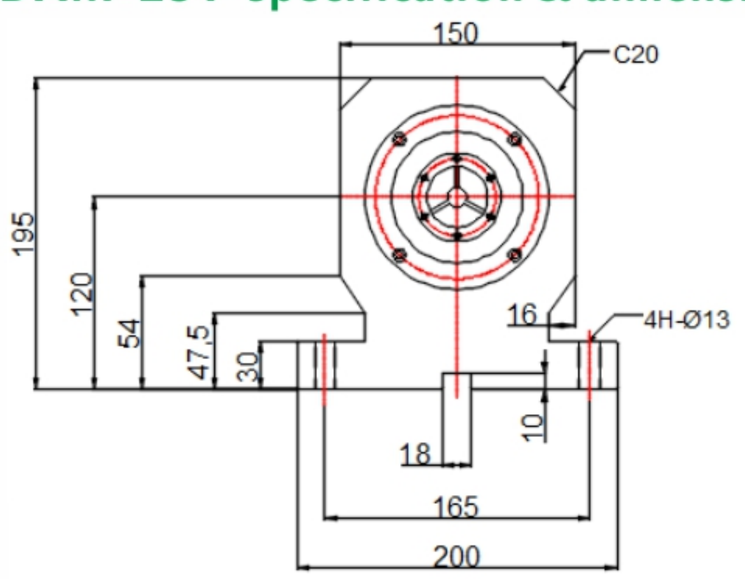

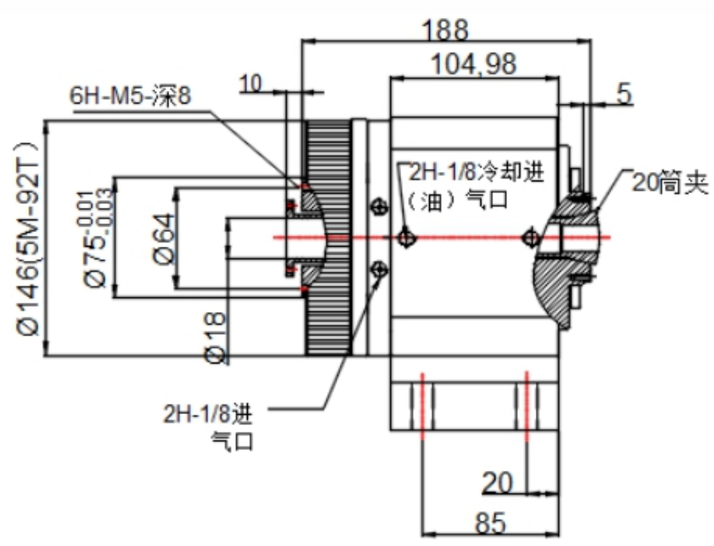

DAM-15T Request:

1.Using 6009/7009 bearing
2. Pneumatic drive tightening
3.Max R.P.M is 3500rpm, with wind or oil cooling system
4.Max clamping range is within ϕ15
5.Collet style: Elastic collet or expanding collet
6.Rotary accuracy within 0.005mm
7. There is a phenomenon of displacement when holding the work-piece
8.Max operation pressure must below 12kg/cm²

DAM-25T Request:

1.Using NSK bearing
2. Pneumatic drive tightening
3.Max R.P.M is 3000rpm, with wind or oil cooling system
4.Max clamping range is within ϕ25
5.Collet style: YB-25 Elastic collet
6.Rotary accuracy within 0.005mm
7.Clamping accuracy within 0.04mm
8. There is a phenomenon of displacement when holding the work-piece
9.Max operation pressure must below 15kg/cm²

Item	DAM–15T
Max rotary speed	3500RPM
Clamping accuracy	within 0.03
Max clamping diameter	Φ15
Match collet	YB–15
Operation pressure	8KG/CM²

Item	DAM–25T
Max rotary speed	3500RPM
Clamping accuracy	within0.05
Max clamping diameter	Φ25
Match collet	YB–25
Operation pressure	15KG/CM²

JDS Pneumatic Diaphragm Chuck

- Steel body
- Max through-hole up to 42mm
- Gripping force can be adjusted according to the enter pressure
- High precision, long life, high rigidity, low chassis
- One chuck double use, use for inner expanding and outer clamping
- No need to revise the accuracy when change the vice jaws
- Using for small work-piece
- Highly dustproof and waterproof.

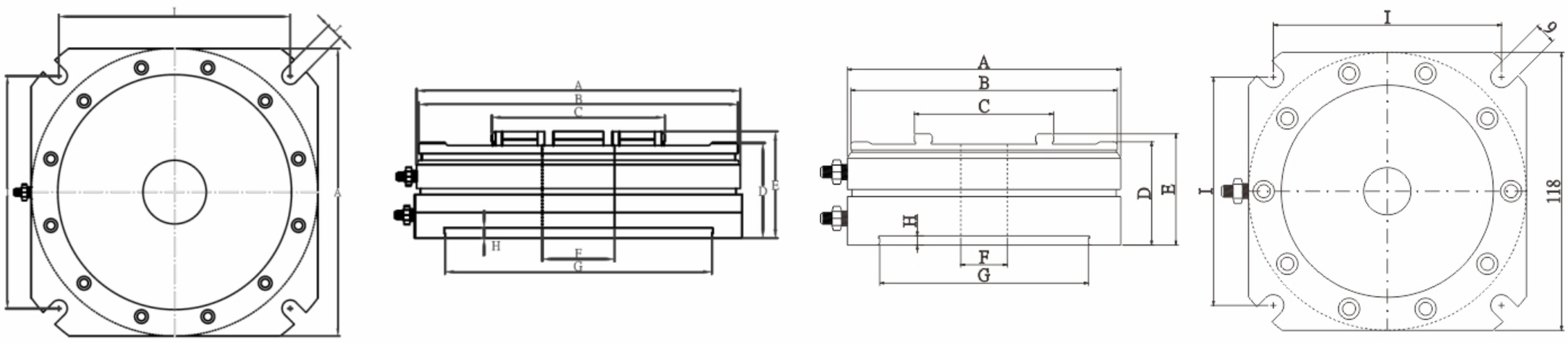

JDS 60 Introduction

JDS-60 stationary diaphragm chuck is designed for milling machine, high precision, simple construction, easy to install. It is using for all kinds of CNC process center, such as engraving and milling machine , improving the efficiency of volume production and saving cost.

Model	JDS 100	JDS 60
A	188(7.40'')	118
B	185(7.28'')	115
C	55.5(2.19'')	60
D	62(2.44'')	44.5
E	70(2.76'')	48
F (P.C.D.)	42(1.65'')	20
G	155(6.10'')	90
H	5(0.2'')	3.5
L	153(6.02'')	97
J	11(0.43'')	9

JAP100 Pneumatic Diaphragm Chuck

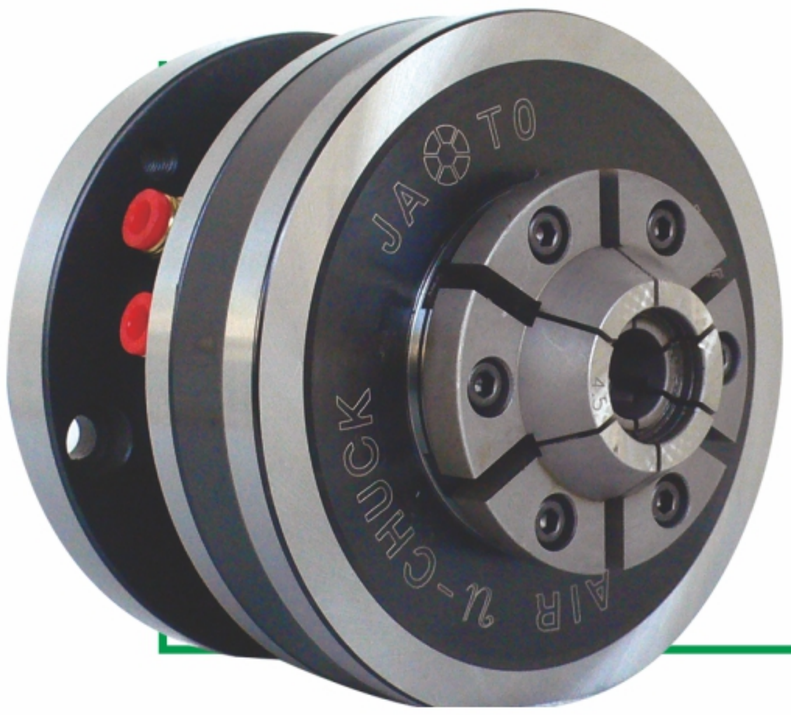

- Repeatability is within 0.005mm.
- Air cylinder is integrated:no rotary cylider or graw tube is required.
- Real front-mounting design allows easy installation.
- Highly-sealed chuck body helps protect cutting chips,dust or coolant fluid from entering.
- Gentle and precise clamping:suitable for fragile parts clanping.
- O.D.chucking/I.D.expanding chuck possible by changing different jaw pads.

Introduction

JATO JAP100 Cylinder-Integrated Pneumatic Diaphragm Chuck provides you with a high accuracy yet hassle-free diaphragm chucking solution, saving you from the trouble of installing rotary cylinders, tailor making any draw tubes or air feeders. And with its real front-mounting design, the installation is revolutionarily easier than ever.

Dimension and Specification

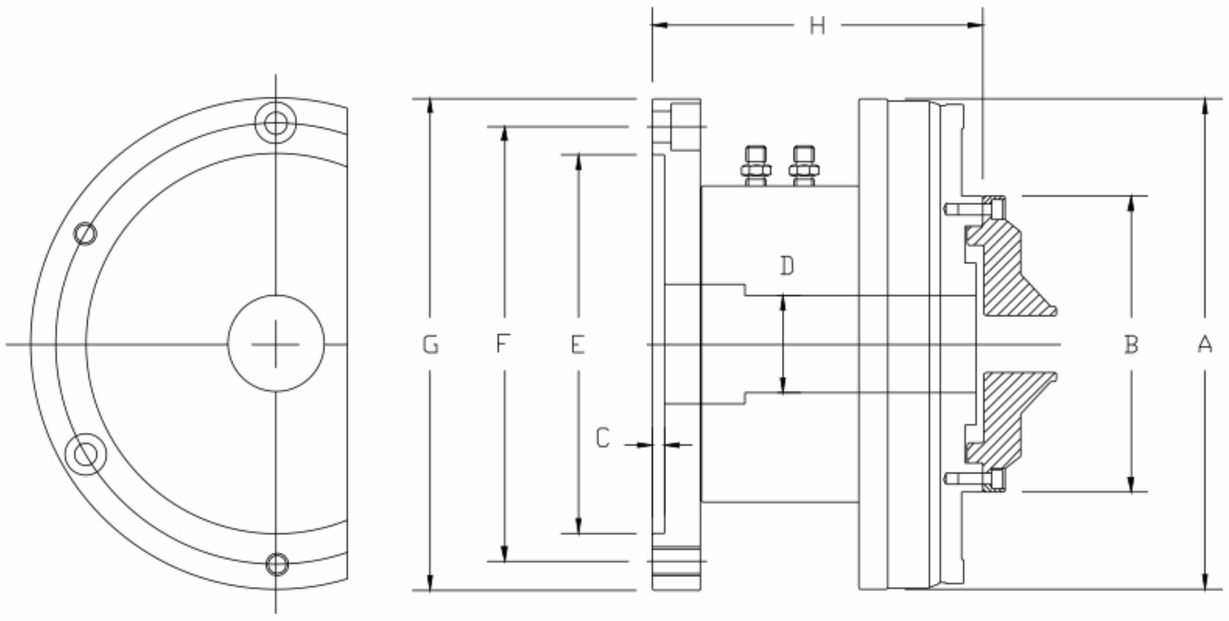

Model	JAP104	JAP105	JAP106
A	101 (3.98")	137 (5.37")	166 (6.54")
B	60 (2.36")	70 (2.76")	100 (3.94")
C	4.0 (0.16")	3.5 (0.14")	5.5 (0.22")
D	10 (0.39")	12 (0.47")	42 (1.65")
E	70 (2.76")	100 (3.94")	130 (5.12")
F (P.C.D.)	82 (3.23")	115 (4.53")	147 (5.79")
G	97 (3.82")	135 (5.31")	167 (6.57")
H	73 (2.87")	90 (3.54")	107 (4.21")
Mounting Bolts	4H-M6(Front)	3H-M8(Front) 3H-M8(Rear)	3H-M10(Front) 3H-M10(Rear)
Max. RPM	4000	3400	2400
Air Pressure	0.5-7kg/cm^2 (7-100psi)	0.5-7kg/cm^2 (7-100psi)	0.5-7kg/cm^2 (7-100psi)
Jaw Opening	0.20mm (0.008")	0.20mm (0.008")	0.20mm (0.008")
Through Hole	10mm (0.39")	14mm (0.57")	42mm (1.65")
Max. Capacity (Non-Through)	42mm (1.65")	50mm (1.93")	78mm (3.07")
Net Weight	2.8kgs (6.2lbs)	6.0kgs (13.2lbs)	9.5kgs (20.9lbs)

Jaw Pad Dimension

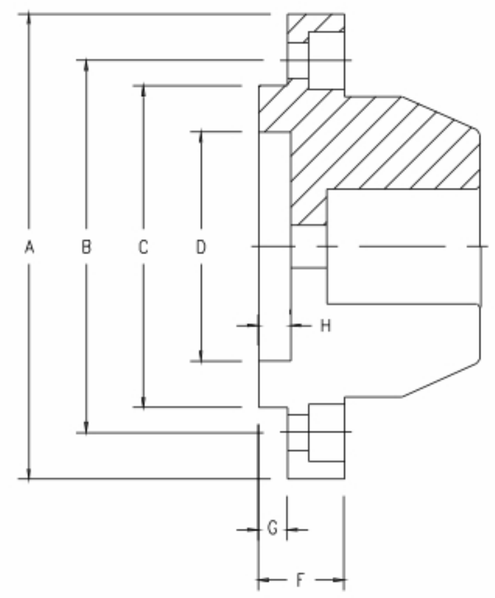

Model	JD-60	JD-70	JD-100
Chuck Model	JAP104	JAP105	JAP106
A	65mm (2.56")	75mm (2.95")	105mm (4.13")
B	52mm (2.05")	60mm (2.36")	90mm (3.54")
C	45mm (1.77")	50mm (1.97")	80.2mm (3.16")
D	32mm (1.26")	32mm (1.26")	65mm (2.56")
F	12mm (0.47")	14mm (0.55")	14mm (0.55")
G	4.0mm (0.16")	5.0mm (0.20")	5.5mm (0.22")
H	4.5mm (0.18")	5.0mm (0.20")	5.0mm (0.20")
Jaw Splits	6	6	6

JP Series

High Speed Diaphragm Chuck

- 0.005mm repeatability.
- Anti centrifugal force design. Clamping force remains high in high R.P.M.
- Integrated dynamic-balancing-weights for fine balance adjustment.
- No sliding parts to wear out.
- Clamping force/stroke is proportional to actuating force.
- Ideal for fragile parts, or thin-wall parts clamping.

JPL Series

Diaphragm Chuck for Grinders

- 0.005mm repeatability.
- Compact size. Light weighted.
- Special for precison grinders.
- No sliding parts to wear out.
- Clamping force/stroke is proportional to actuating force..
- Ideal for fragile parts, or thin-wall parts clamping.

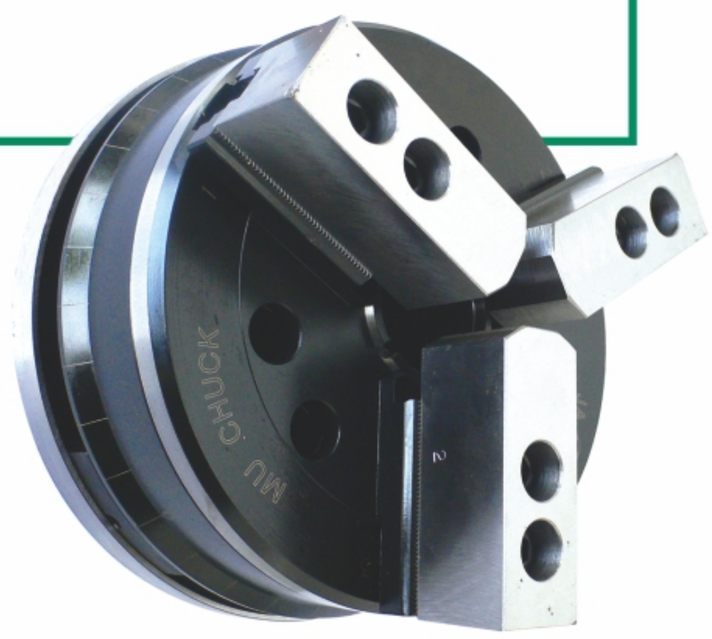

Introduction

JP/JPL Series Diaphragm Chuck performs its clamping movement by material deformation which features high repeatability and low maintenance requirements. Compared to regular wedge-hook power chucks, JP/JPL diaphragm chuck owns high repeatability of 0.005mm, and longer product life since JP/JPL has no clearance, no sliding parts to wear out. JP is designed for high speed turning machines. It incorporates balancing-weights to eliminate centrifugal force. JPL is specially designed for precision grinders. The chuck is with low profile and mass which enable your machines to have high performance and high chucking accuracy.

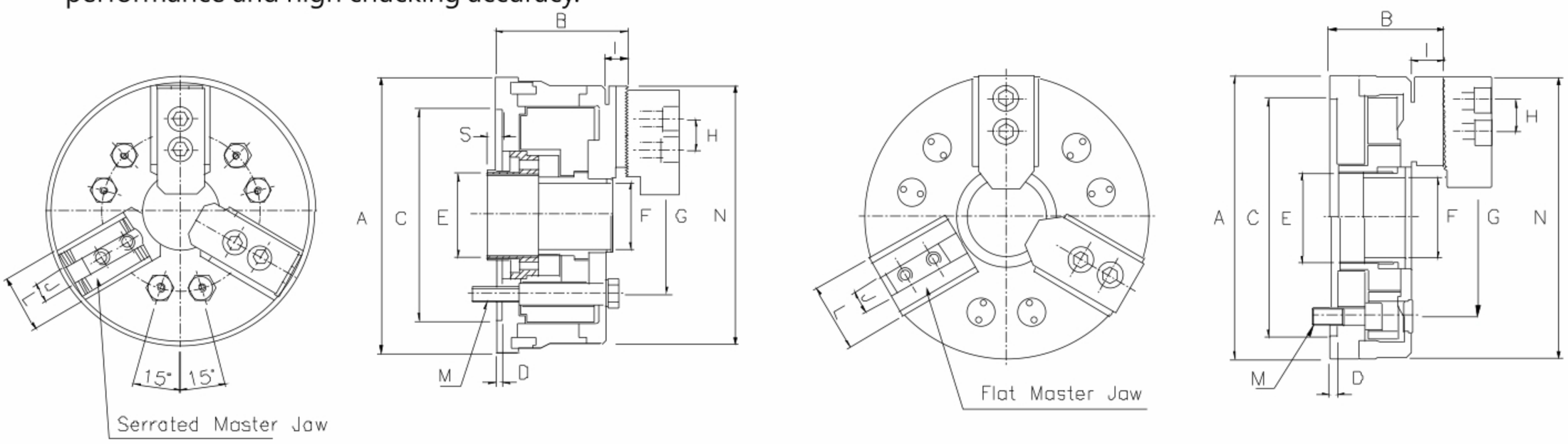

Model	JP-05	JP-06	JP-08	JP-10	JP-06L	JP-08L
A	147mm (5.79")	182mm (7.17")	232mm (9.13")	267mm (10.51")	167mm (6.57")	217mm (8.54")
B	68mm (2.68")	87mm (3.42")	98mm (3.86")	105mm (4.13")	65.5mm (2.58")	71.5mm (2.82")
C (H6)	110mm (4.33")	140mm (5.51")	170mm (6.69")	220mm (8.66")	140mm (5.51")	170mm (6.69")
D	4mm (0.16")	4.5mm (0.16")	4.5mm (0.16")	5mm (0.20")	5mm (0.20")	5mm (0.20")
E	M40 x P1.5	M55 x P2.0	M60 x P2.0	M85 x P2.0	M55 x P2.0	M60 x P2.0
F	33mm (1.30")	44mm (1.73")	50mm (1.97")	75mm (2.95")	44mm (1.73")	52mm (2.05")
G (P. C. D.)	82.6mm (3.25")	104.8mm (4.13")	133.4mm (5.25")	171.4mm (6.75")	104.8mm (4.13")	133.4mm (5.25")
H	14mm (0.55")	20mm (0.79")	25mm (0.98")	30mm (1.18")	20mm (0.79")	25mm (0.98")
I	13mm (0.51")	15mm (0.60")	17mm (0.67")	17mm (0.67")	17.5mm (0.69")	18.5mm (0.73")
J	10mm (0.39")	12mm (0.47")	14mm (0.55")	16mm (0.63")	12mm (0.47")	14mm (0.55")
L	30mm (1.18")	38mm (1.50")	42mm (1.65")	47mm (1.85")	38mm (1.50")	42mm (1.65")
M	M10 x 3	M10 x 6	M12 x 6	M16 x 6	M10 x 6	M12 x 6
N	136mm (5.35")	170mm (6.70")	217mm (8.54")	256mm (10.08")	165mm (6.50")	220mm (8.66")
S	14mm (0.55")	11mm (0.43")	11mm (0.43")			
Max. RPM	8000	7500	6500	5500	600	600
Max. Axial Force	1750kgf (3850lbf)	2250kgf (4950lbf)	3500kgf (7700lbf)	4750kgf (10450lbf)	2250kgf (4950lbf)	3500kgf (7700lbf)
Net Weight	5.5kgs (12.1lbs)	11.0kgs (24.2lbs)	20.0kgs (44.0lbs)	30.5kgs (67.1lbf)	5.5kgs (12.1lbs)	8.0kgs (17.6lbs)

JAS-PL

Stationary Chuck

- Steel chuck body.
- Pull back to close: high precision.
- Adopting 5C / 16C collets.
- High resistant to chips, fluid and dust.
- High accuracy. High rigidity.

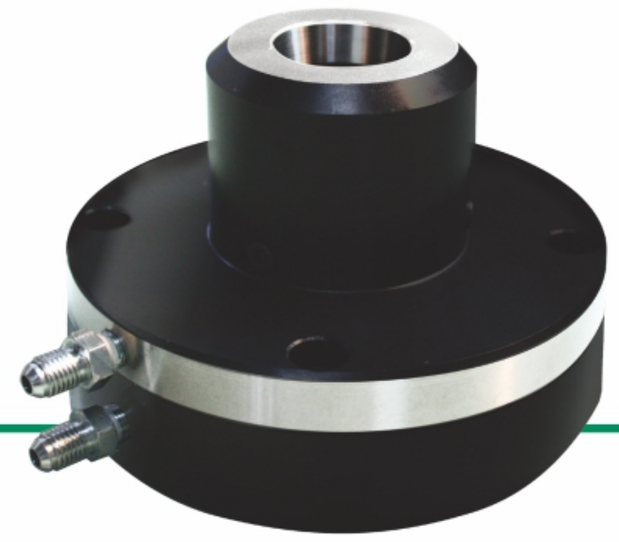

CAF

Stationary Chuck

- Cast iron chuck body.
- Dead length design: no axial movement.
- Cost effective stationary collet chuck.
- High resistant to chips, fluid and dust.
- High rigidity. Long product life.

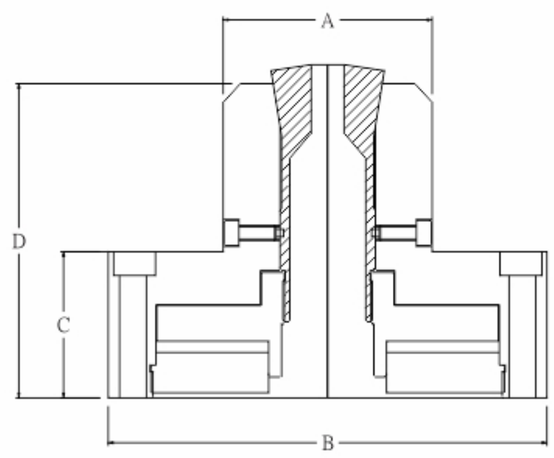

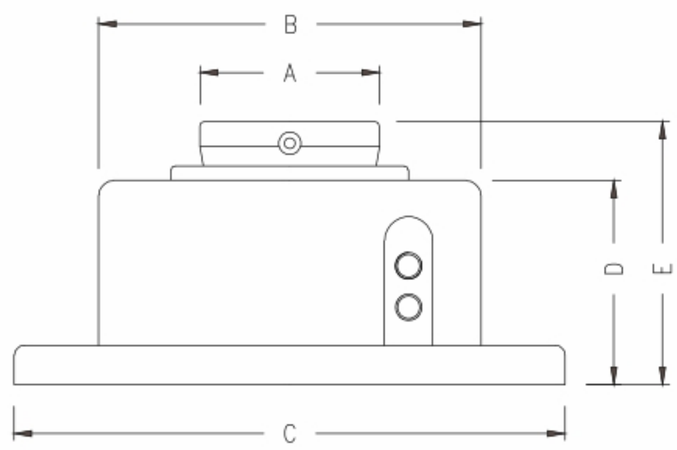

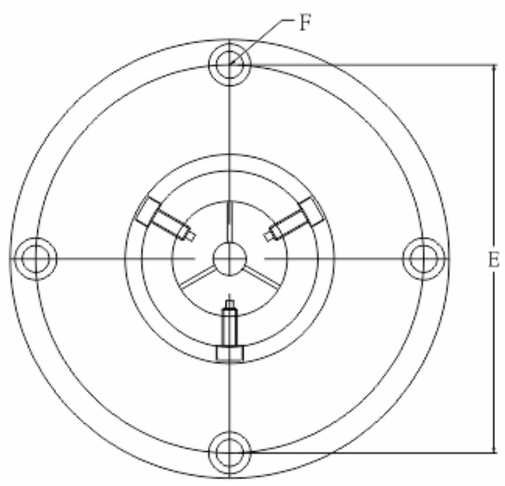

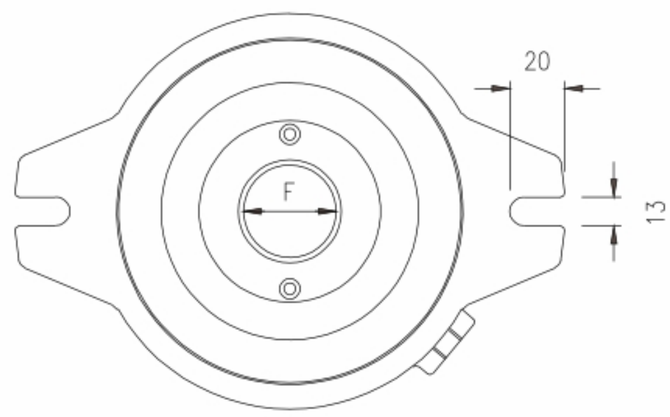

JAS-PL Dimension

Model	JAS-5C-PL	JAS-16C-PL
A	70 (2.76")	90 (3.54")
B	147 (5.79")	178 (7.00")
C	49 (1.93")	49 (1.93")
D	105 (4.13")	126 (4.96")
E	130 (5.12")	158 (6.22")
F (Bolts)	4H-M8	4H-M8
Collet	5C Collet	16C Collet
Operating Pressure	3-8kg/cm^2 (43-114psi)	3-8kg/cm^2 (43-114psi)
Max. Capacity	26mm (1.02")	40mm (1.57")
Piston Area	88cm^2 (13.7in^2)	131cm^2 (20.3in^2)
Gripping Force	3175kgf@7kg/cm^2 (6985lbf@100psi)	4725kgf@7kg/cm^2 (10395lbf@100psi)
Net Weight	6.5kgs (14.3lbs)	12.5kgs (27.5lbs)

CAF Dimension

Model	CAF-25	CAF-40	CAF-70
A	60 (2.36")	94 (3.70")	136 (5.35")
B	162 (6.38")	196 (7.72")	216 (8.50")
C	222 (8.74")	256 (10.08")	291 (11.46")
D	73 (2.87")	96 (3.78")	103 (4.06")
E	103 (4.06")	124 (4.88")	135 (5.31")
F	26 (1.02")	48 (1.89")	68 (2.68")
Collet / Jaw	YB-25 Collet	C-40 Jaw	C-70 Jaw
Air / Hydro	Air / Hydro	Air	Air
Operating Pressure	3-15kg/cm^2 (43-214psi)	3-8kg/cm^2 (43-114psi)	3-8kg/cm^2 (43-114psi)
Max. Capacity	26mm (1.02")	45mm (1.77")	68mm (2.68")
Gripping Torque	6kgf-m (43lbf-ft)	6kgf-m (43lbf-ft)	7kgf-m (50lbf-ft)
Net Weight	9.0kgs (19.8lbs)	14.0kgs (30.8lbs)	23.0kgs (50.6lbs)

CPC Power Collet Chuck

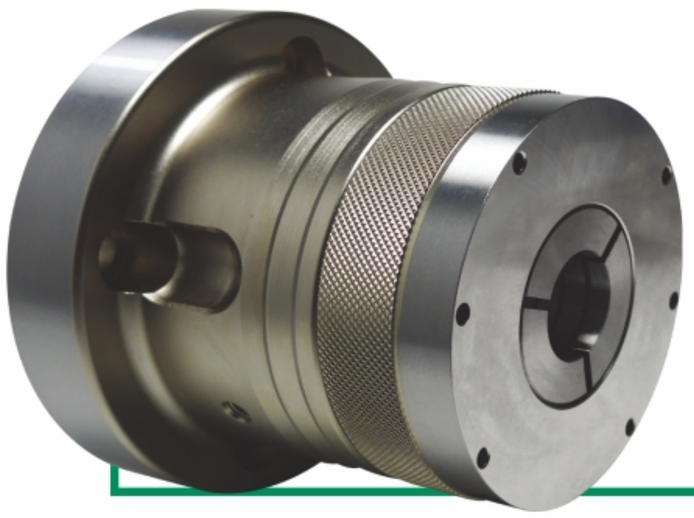

- Adopting DIN6343 collets: 173E(B42), 185E(B60), 193E(B80).
- Adopting C-44 collets.
- Precision dead-length collet chuck: 0.025mm repeatability.
- CPC is the most popular model for CNC lathes.

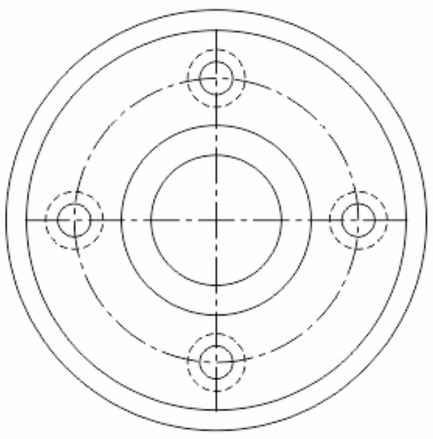

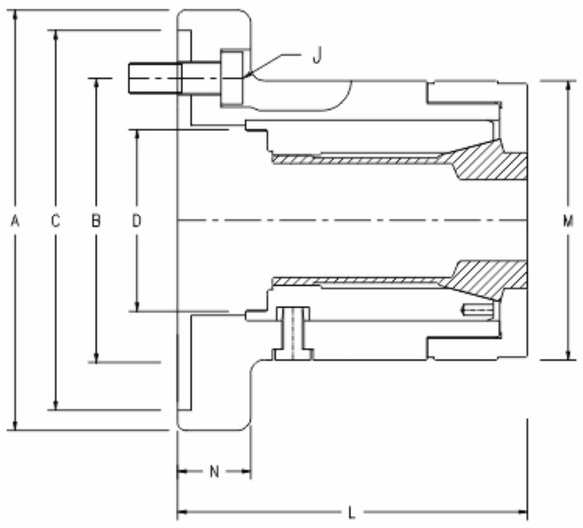

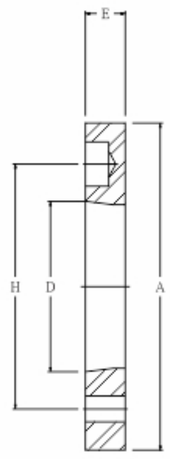

Fig. 1

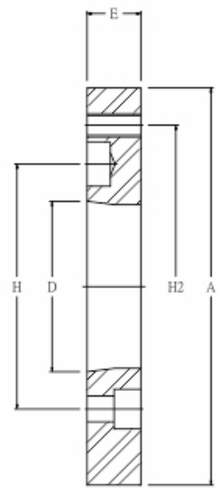

Fig. 2

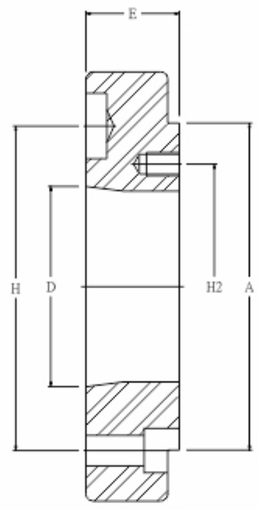

Fig. 3

Dimension and Specification

Model	CPC-42Z140	CPC-44Z140	CPC-60Z170	CPC-80Z220
A	155mm (6.10")	155mm (6.10")	186mm (7.32")	236mm (9.30")
B (P.C.D)	104.8mm (4.13")	104.8mm (4.13")	133.4mm (5.25")	171.4mm (6.75")
C	140mm (5.51")	140mm (5.51")	170mm (6.69")	220mm (8.66")
D	M66xP1.5	M66xP1.5	M90xP1.5	M100xP2.0
L	125mm (4.92")	125mm (4.92")	140mm (5.50")	164mm (6.60")
M	104mm (4.09")	104mm (4.09")	134mm (5.28")	167mm (6.57")
N	23mm (0.91")	23mm (0.91")	27mm (1.06")	32mm (1.26")
J	3H-M10	3H-M10	6H-M12	6H-M16
Collet Model	DIN6343 173E (B42)	C-44	DIN6343 185E (B60)	DIN6343 193E (B80)
Sleeve Axial Stroke	4.5mm (0.18")	4.5mm (0.18")	4.5mm (0.18")	4.5mm (0.18")
Max. Capacity	42mm (1.65")	44mm (1.73")	60mm (2.36")	80mm (3.15")
Max. Pull Foce	2400kgf (5280lbf)	2400kgf (5280lbf)	3000kgf (6600lbf)	3300kgf (7260lbf)
Max. Gripping Force	4200kgf (9240lbf)	4200kgf (9240lbf)	5250kgf (11550lbf)	5775kgf (12705lbf)
Max. RPM	6000	6000	5000	4000
Net Weight	7.0kgs (15.4lbs)	7.0kgs (15.4lbs)	11.5kgs (25.3lbs)	22.5kgs (49.5lbs)
Available Adaptors	A2-4/A2-5/A2-6	A2-4/A2-5/A2-6	A2-5/A2-6/A2-8	A2-6/A2-8/A2-11

Adaptors Dimension

Chuck Model	Spindle Nose D	Figure	A	H	H2	E
CPC-42Z140 CPC-44Z140	A2-4	Fig. 2	140 (5.10")	82.6 (3.25")	104.8 (4.13")	20 (0.79")
	A2-5	Fig. 1	140 (5.10")	104.8 (4.13")	-	15 (0.59")
	A2-6	Fig. 3	140 (5.10")	133.4 (5.25")	104.8 (4.13")	40 (1.57")
CPC-60Z170	A2-5	Fig. 2	170 (6.69")	104.8 (4.13")	133.4 (5.25")	23 (0.91")
	A2-6	Fig. 1	170 (6.69")	133.4 (5.25")	-	17 (0.67")
	A2-8	Fig. 3	170 (6.69")	171.4 (6.75")	133.4 (5.25")	45 (1.77")
CPC-80Z220	A2-6	Fig. 2	220 (8.66")	133.4 (5.25")	171.4 (6.75")	28 (1.10")
	A2-8	Fig. 1	220 (8.66")	171.4 (6.75")	-	18 (0.71")
	A2-11	Fig. 3	220 (8.66")	235.0 (9.25")	171.4 (6.75")	54 (2.13")

JPC Power Collet Chuck

Adopting SZM Spannstar Clamping Heads

- Precision pull back collet chuck: 0.010mm repeatability.
- Fast collet change design: less than 30 seconds.
- Removable End-Stop to ensure axial accuracy.
- Large clamping range: 0.5mm opening.
- Adopting SZM Spannstar vulcanized Clamping Heads. (compatible with Hainbuch, Ortlieb, and other brands)

Dimension and Specification

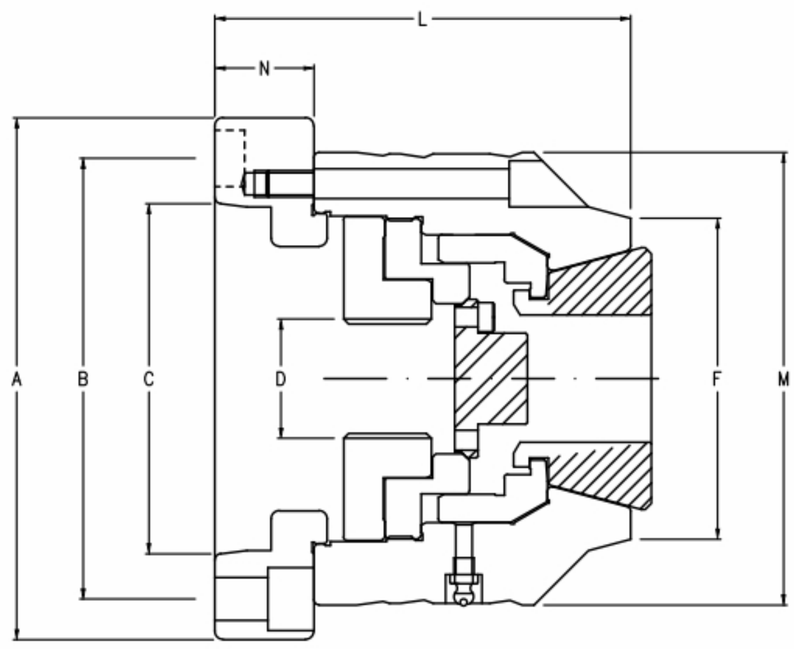

SZM GMHB Original Spannstar Clamping Heads

Model	JPCA-42A5	JPCA-42A6	JPCA-65A5	JPCA-65A6
Spindle Nose	A2-5	A2-6	A2-5	A2-6
A	138 (5.43")	164 (6.46")	138 (5.43")	164 (6.46")
B (P.C.D.)	104.8 (4.13")	133.4 (5.25")	104.8 (4.13")	133.4 (5.25")
C	82.6 (3.25")	106.4 (4.19")	82.6 (3.25")	106.4 (4.19")
D (Drawtube Max.)	M55	M55	M72	M72
F	97 (3.82")	97 (3.82")	119 (4.69")	119 (4.69")
L	123 (4.84")	126 (4.96")	138 (5.43")	141 (5.55")
M	137 (5.39")	137 (5.39")	164 (6.46")	164 (6.46")
N	27 (1.06")	30 (1.18")	27 (1.06")	30 (1.18")
Mounting Bolts	6H-M10	6H-M12	6H-M10	6H-M12
Collet Model	SS42 (42BZI)	SS42 (42BZI)	SS65 (65BZI)	SS65 (65BZI)
Axial Stroke	5.0mm (0.22")	5.0mm (0.22")	5.0mm (0.22")	5.0mm (0.22")
Clamping Range	±0.5mm (±0.02")	±0.5mm (±0.02")	±0.5mm (±0.02")	±0.5mm (±0.02")
Max. Capacity	42mm (1.65")	42mm (1.65")	65mm (2.56")	65mm (2.56")
Max. Axial Force	3200kgf (7040lbf)	3200kgf (7040lbf)	4000kgf (8800lbf)	4000kgf (8800lbf)
Max. Clamping Force	7200kgf (15840lbf)	7200kgf (15840lbf)	7200kgf (20800lbf)	7200kgf (20800lbf)
Max. RPM	6500	6500	5500	5500
Net Weight	9.5kgs (20.9lbs)	10.5kgs (23.1lbs)	14.0kgs (30.8lbs)	15.0kgs (33.0lbs)

JAP207-42BZI

Air Collet Chuck

for Hainbuch Style Collets

- Adopts Hainbuch style clamping heads.
- Built-in rotary air cylinder.
- Precision pull-backd collet chuck: 0.010mm repeatability.
- Chuck is with through hole for bar parts.
- Double piston: large gripping force.
- High resistance to coolant fluid and chips penetration.

CHP206-SS42

Hydraulic Collet Chuck

for Rotary Tables / Indexing Tables

- Adopts Hainbuch style clamping heads.
- Built-in rotary hydraulic cylinder.
- Precision pull-back collet chuck: 0.010mm repeatability.
- Special for rotary tables / indexing tables.
- Real front-mounting design allows easy installation.
- Hydraulic actuated: large gripping force.

Dimension and Specification

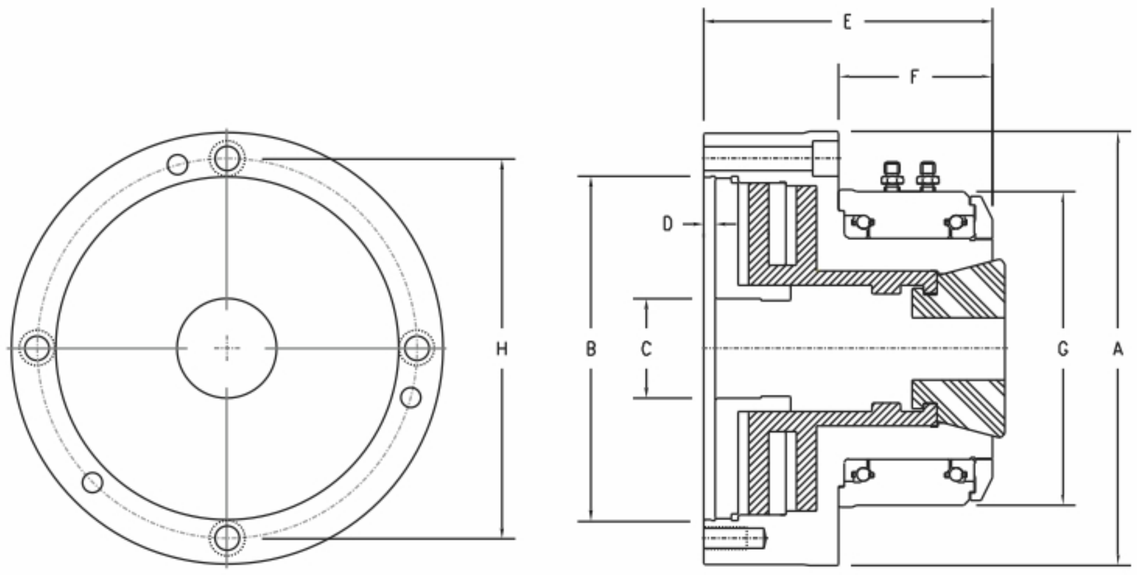

Model	JAP207-42BZI	CHP206-SS42
Air / Hydraulic	Air	Hydraulic
A	197 (7.75")	166 (6.54")
B	155 (6.10")	130 (5.12")
C	42 (1.65")	42 (1.65")
D	4.5 (0.18")	4.5 (0.18")
E	146 (5.75")	100 (3.94")
F	69 (2.72")	52 (2.05")
G	146 (5.75")	135(5.31")
H (P.C.D.)	172 (6.77")	147 (5.79")
Mounting Bolts	3H-M10 (Front) + 3H-M10 (Rear)	4H-M10 (Front)
Collet Model	SZM SS42	SZM SS42
Max. R.P.M.	2500	120
Operation Pressure	3-7kg/cm^2 (40-100psi)	10-35kg/cm^2 (143-500psi)
Max. Capacity	42mm (1.65")	42mm (1.65")
Piston Area	256cm2 (40.0in^2)	66cm2 (10.2in^2)
Gripping Force	5572kgf @7kg/cm^2 (12258lbf @100psi)	5669kgf @30kg/cm^2 (12472lbf @428psi)
Net Weight	20kgs (44lbs)	10kgs (22lbs)

Application

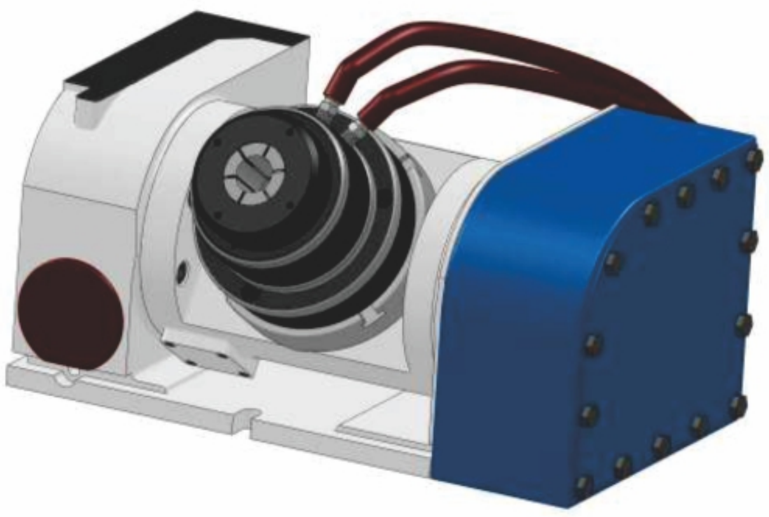

CHP206-SS42 and JAP207-42BZI can be front-mounted onto a 4-axis or 5-axis rotary table.

CPD

Dead-Length Collet Chuck

- Adops 5C / 16C collets.
- 5C Collet: max. capacity 26mm.
- 16C Collet: max. capacity 40mm.

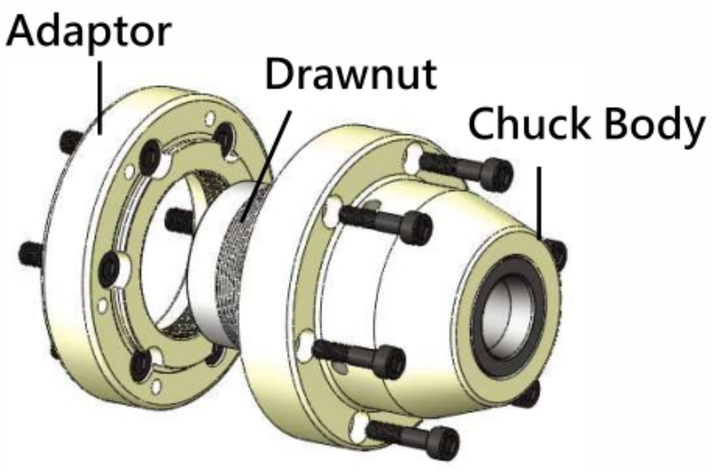

JATO offers a blank drawnut when shipping the chuck. Customers could thread the drawnut according to the drawtube of the machine.

CPD Collet Chuck Dimension

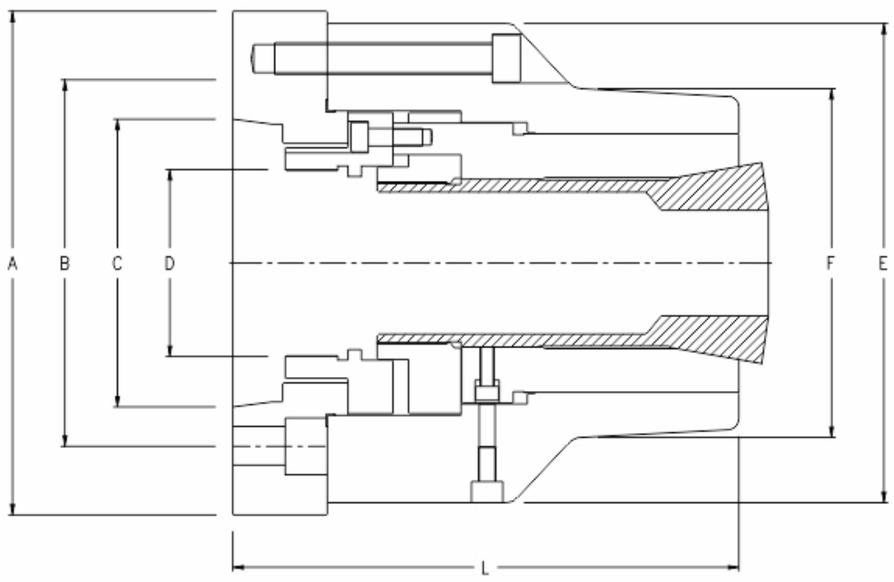

Model	CPD-5CA5	CPD-5CA6	CPD-16CA5	CPD-16CA6
Spindle Nose	A2-5	A2-6	A2-5	A2-6
A	138 (5.43")	158 (6.22")	138 (5.43")	158 (6.22")
B (P.C.D.)	104.8 (4.13")	133.4 (5.25")	104.8 (4.13")	133.4 (5.25")
C	82.6 (3.25")	106.4 (4.19")	82.6 (3.25")	106.4 (4.19")
D (for Drawtube)	M73 x P1.5	M73 x P1.5	M91 x P1.5	M91 x P1.5
E	100 (3.94")	100 (3.94")	138 (5.43")	138 (5.43")
F	78 (3.07")	78 (3.07")	90 (3.54")	90 (3.54")
L	123 (4.84")	125 (4.92")	145 (5.71")	148 (5.83")
Mounting Bolts	6H-M10	6H-M12	6H-M10	6H-M12
Collet Model	5C	5C	16C	16C
Max. Pull Force	1800kgf (3900lbf)	1800kgf (3900lbf)	2300kgf (5060lbf)	2300kgf (5060lbf)
Max. RPM	6000	6000	5000	5000
Net Weight	8.0kgs (17.6lbs)	9.0kgs (19.8lbs)	10.0kgs (22lbs)	12.0kgs (26.4lbs)

CPB

Pull Back Collet Chuck

- Adops 5C / 16C collets.
- 5C Collet: max. capacity 26mm.
- 16C Collet: max. capacity 40mm.
- Pull back design. High accuracy.

CPB Collet Chuck Dimension

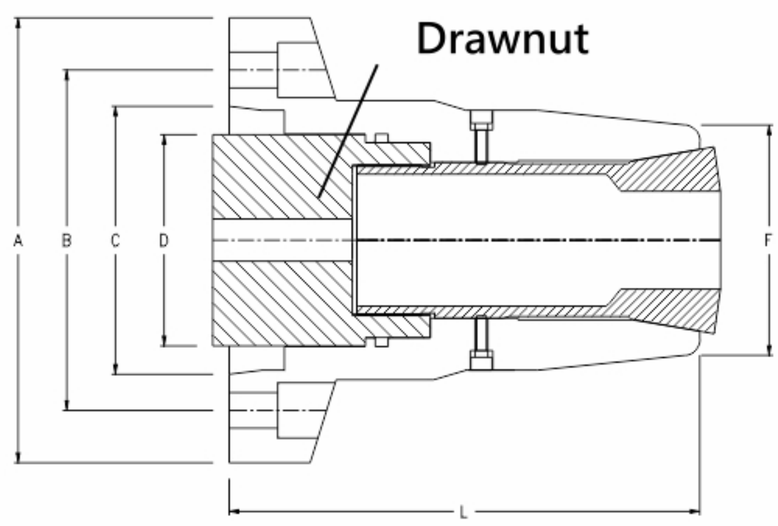

Model	CPB-5CA5	CPB-5CA6	CPB-16CA5	CPB-16CA6
Spindle Nose	A2-5	A2-6	A2-5	A2-6
A	137 (5.39")	166 (6.54")	137 (5.39")	166 (6.54")
B (P.C.D)	104.8 (4.13")	133.4 (5.25")	104.8 (4.13")	133.4 (5.25")
C	82.6 (3.25")	106.4 (4.19")	82.6 (3.25")	106.4 (4.19")
D (for Drawtube)	Max.M58	Max.M65	Max.M58	Max.M65
F	60 (2.36")	60 (2.36")	80 (3.15")	80 (3.15")
L	122 (4.80")	122 (4.80")	145 (5.71")	145 (5.71")
Mounting Bolts	3H-M10	3H-M12	6H-M10	6H-M12
Collet Model	5C	5C	16C	16C
Max. Pull Force	1800kgf (3900lbf)	1800kgf (3900lbf)	2300kgf (5060lbf)	2300kgf (5060lbf)
Max. RPM	6000	6000	5000	5000
Net Weight	5.0kgs (11.0lbs)	7.5kgs (16.5lbs)	5.5kgs (12.1lbs)	10.0kgs (22.0lbs)

Rotary Power Chuck

- Self-Contained Power Chuck. No need for an extra rotary actuator.
- Aluminum alloy chuck body, light-weighted, good heat dispensation.
- Allows non-stop operation when loading/ unloading parts.
- Widely applied to convert manual lathes into powered ones. Refer to the following figure.

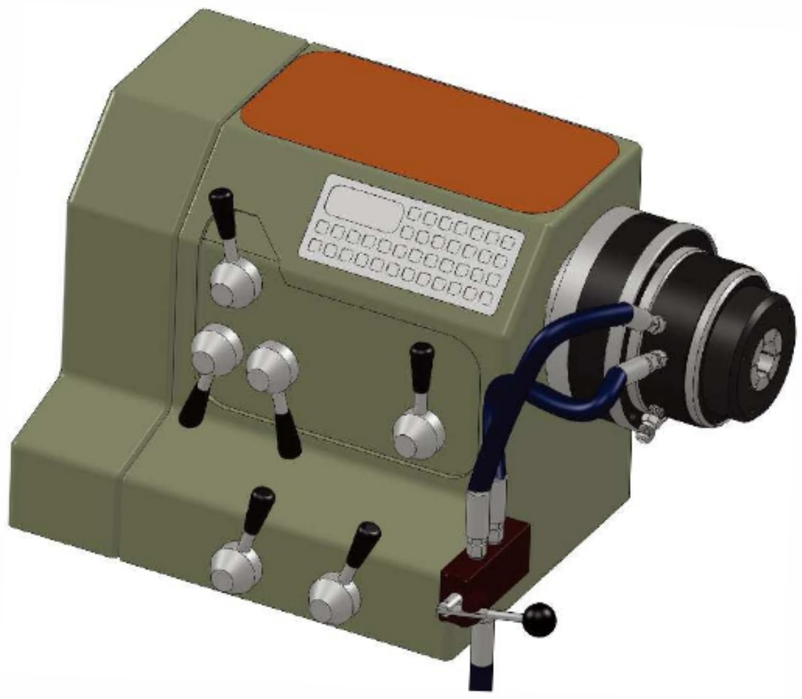

Application: Rotary Power Chuck can be front-mounted onto a manual lathe to increase its production efficiency.

(Collet Style)

(Jaw Style)

Introduction

It used to be complex for users to convert a manual lathe into one with power workholding device since setting up a hydraulic system is quite troublesome. JATO Rotary Power Chuck is specially designed to help users to set up a power chuck in a low cost and easy way. With its built-in rotary actuator, the Rotary Power Chuck can be installed and start working in less than 20 minutes.

Rotary Power Chuck comes with both air chuck and hydraulic chuck models that range from small sizes to large ones, giving users more options to choose from. Rotary Power Chuck now is widely applied to convert manual lathes to semi-auto ones with power workholding system, or is applied to build special purpose machines.

Collet Style Chuck

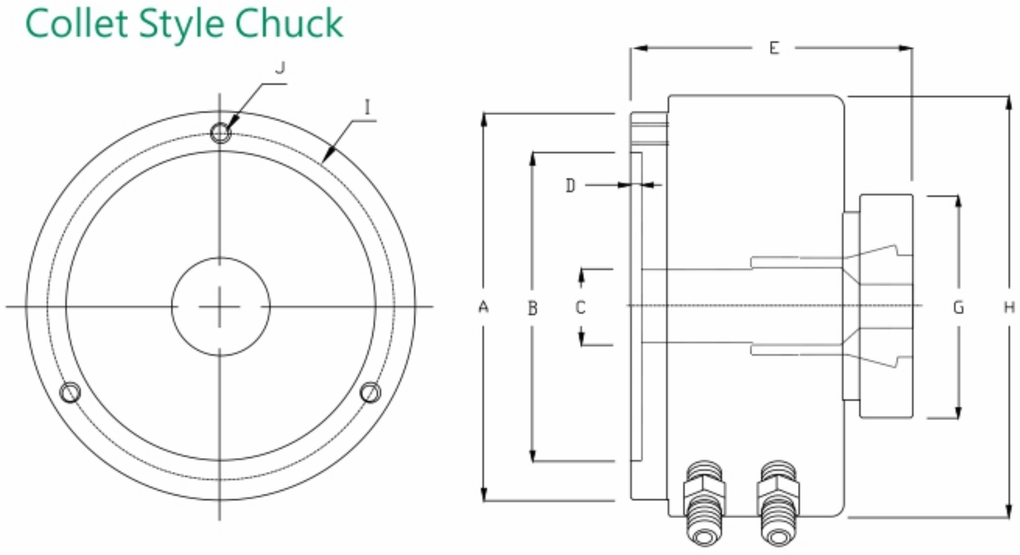

Jaw Style Chuck

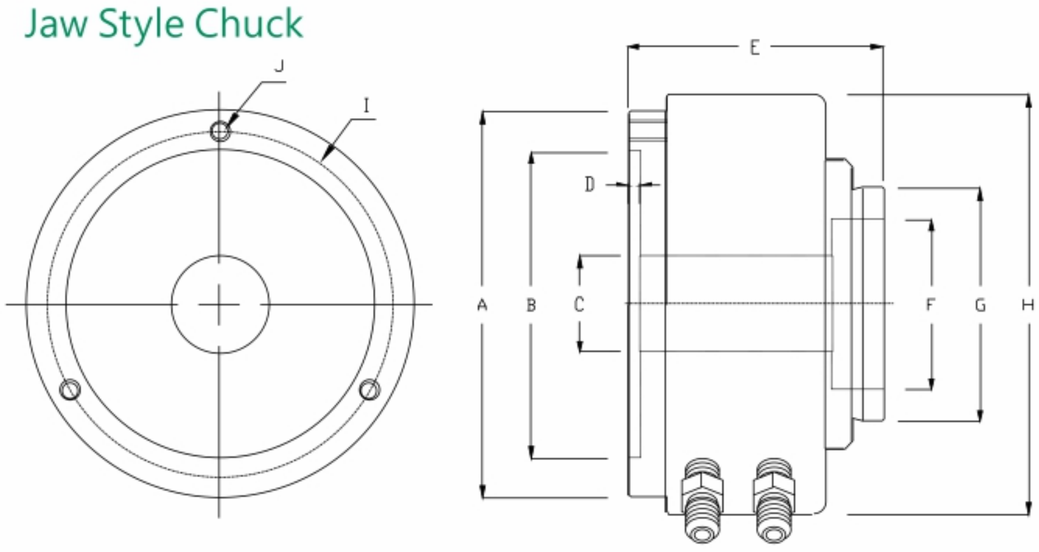

Rotary Power Chuck

Collet Style Power Chuck

Model	JA7-44	JH7-44
A	192 (7.56")	192 (7.56")
B	155 (6.10")	155 (6.10")
C	44 (1.73")	44 (1.73")
D	5 (0.20")	5 (0.20")
E	135 (5.31")	135 (5.31")
F	-	-
G	107 (4.21")	107 (4.21")
H	212 (8.35")	212 (8.35")
I (P.C.D)	172 (6.77")	172 (6.77")
J	3H-M10 (rear)	3H-M10 (rear)
Collet / Jaw Model	C-44 Collet	C-44 Collet
Air / Hydraulic	Air	Hydraulic
Operating Pressure	2-20kg/cm^2 (28-286psi)	2-20kg/cm^2 (28-286psi)
Max. R.P.M.	1600	1600
Max. Capacity (through/none)	44mm (1.73")	44mm (1.73")
Piston Area	117cm^2 (18in^2)	117cm^2 (18in^2)
Gripping Force	5400kgf@16kg/cm^2 (12020lbf@229psi)	10800kgf@16kg/cm^2 (24040lbf@229psi)
Net Weight	17kgs (37.4lbs)	17kgs (37.4lbs)

Jaw Style Power Chuck - Air

JA5-25	JA7-40	JA7-70
135 (5.31")	192 (7.56")	192 (7.56")
100 (3.94")	155 (6.10")	155 (6.10")
25 (0.98")	45 (1.77")	68 (2.68")
4.0 (0.16")	4.5 (0.18")	5.0 (0.20")
102 (4.02")	126 (4.96")	141 (5.55")
45 (1.77")	65 (2.56")	105 (4.13")
68 (2.68")	94 (3.70")	136 (5.35")
170 (6.69")	212 (8.35")	265 (10.43")
115 (4.53")	172 (6.77")	172 (6.77")
3H-M8 (rear)	3H-M10 (rear)	3H-M10 (rear)
C-25 Jaw	C-40 Jaw	C-70 Jaw
Air	Air	Air
2-9kg/cm^2 (28-130psi)	2-9kg/cm^2 (28-130psi)	2-9kg/cm^2 (28-130psi)
1800	1600	1400
25mm/32mm (0.98"/1.26")	45mm/50mm (1.77"/1.97")	68mm/90mm (2.68"/3.54")
115cm^2 (17.8in^2)	182cm^2 (28.2in^2)	329cm^2 (50.8in^2)
2254kgf@7kg/cm^2 (4958lbf@100psi)	3567kgf@7kg/cm^2 (7847lbf@100psi)	6429kgf@7kg/cm^2 (14143lbf@100psi)
7.5kgs (16.5lbs)	15.0kgs (33.0lbs)	22.5kgs (49.5lbs)

Jaw Style Power Chuck - Hydraulic

Model	JH5-25	JH7-40	JH7-70	JH9-90	JH9-120
A	135 (5.31")	192 (7.56")	192 (7.56")	230 (9.06")	229 (9.02")
B	100 (3.94")	155 (6.10")	155 (6.10")	190 (7.48")	190 (7.48")
C	25 (0.98")	45 (1.77")	68 (2.68")	88 (3.52")	118 (4.65")
D	4.0 (0.16")	4.5 (0.18")	5.0 (0.20")	5.5 (0.22")	5.5 (0.22")
E	102 (4.02")	126 (4.96")	141 (5.55")	150 (5.91")	157 (6.18")
F	45 (1.77")	65 (2.56")	105 (4.13")	105 (4.13")	140 (5.51")
G	68 (2.68")	94 (3.70")	136 (5.35")	136 (5.35")	168 (6.61")
H	138 (5.43")	190 (7.48")	211 (8.31")	232 (9.13")	275 (10.83")
I (P.C.D)	115 (4.53")	172 (6.77")	172 (6.77")	210 (8.27")	210 (8.27")
J	3H-M8 (rear)	3H-M10 (rear)	3H-M10 (rear)	3H-M12 (rear)	3H-M12 (rear)
Collet / Jaw Model	C-25 Jaw	C-40 Jaw	C-70 Jaw	C-90 Jaw	C-120 Jaw
Air / Hydraulic	Hydraulic	Hydraulic	Hydraulic	Hydraulic	Hydraulic
Operating Pressure	10-25kg/cm^2 (143-357psi)	10-20kg/cm^2 (143-286psi)	10-20kg/cm^2 (143-286psi)	10-15kg/cm^2 (143-214psi)	10-15kg/cm^2 (143-214psi)
Max. R.P.M.	1800	1600	1400	1100	900
Max. Capacity (through/none)	25mm/32mm (0.98"/1.26")	45mm/50mm (1.77"/1.97")	68mm/90mm (2.68"/3.54")	88mm/88mm (3.52"/3.52")	118mm/118mm (4.65"/4.65")
Piston Area	56cm^2 (8.68in^2)	85cm^2 (13.1in^2)	117cm^2 (18.1in^2)	133cm^2 (20.7in^2)	183cm^2 (28.4in^2)
Gripping Force	2508kgf@16kg/cm^2 (5519lbf@228psi)	4032kgf@16kg/cm^2 (8870lbf@228psi)	5197kgf@16kg/cm^2 (11433lbf@228psi)	5913kgf@16kg/cm^2 (13009lbf@228psi)	6148kgf@12kg/cm^2 (13528lbf@171psi)
Net Weight	6.0kgs (13.2lbs)	13.0kgs (28.6lbs)	18.0kgs (39.6lbs)	24.0kgs (52.8lbs)	30.0kgs (66.0lbs)

Back–pulled collet						Max clamping diameter		
Style	PIC	d	α (obliquity)	L(Length)	M(screw)	circular hole	quadrangle	hexagonal
YB–15	Fig.1	19	10°	76	M18*P1.2	15	10.6	13
YB–25	Fig.1	31.75	10°	102	M31.5*20T	26	18.3	22.5
5C	Fig.1	31.75	10°	87	M31.5*20T	26	18.3	22.5
16C	Fig.1	48	10°	114	M47.5*P1.75	40	28.2	34.6

Front–mounted Collet						Max clamping diameter		
Style	PIC	d	α (obliquity)	L(Length)	D	circular hole	quadrangle	hexagonal
B30 (163E)	Fig.2	35	15°	80	48	30	21.2	25.9
B42 (173E)	Fig.2	48	15°	94	60	42	30.1	36.3
B60 (185E)	Fig.2	66	15°	110	84	60	42.4	51.9
B80 (193E)	Fig.2	90	15°	130	107	80	56.5	69.2
C–44	Fig.2	54	19°	87	68	44	31	38.1

Precision rubber cylinder holder						Clamping range		
Style	PIC	d	α (obliquity)	L(Length)	D	circular hole	quadrangle	hexagonal
SS42	Fig.3	54	15°	42	79.3	4–42	30.1	36.3
Ss65	Fig.3	80	15°	53	99.5	4–65	45.9	56.2

Replace collet for high speed rotary chuck								
Style	PIC	d	α (obliquity)	L(Length)	M(screw)	D1	D2	
JA5–25 JH5–25	Fig.4	39	15°	98	M35.9*16T	45	68	
JA7–40 JH7–40	Fig.4	60	15°	120	M59.0*16T	65	94	
JA7–70 JH7–70	Fig.4	82	15°	135	M79.9*16T	105	136	
JH9–90	Fig.4	82	15°	135	M79.9*16T	105	136	
JH9–120	Fig.4	135	15°	151	M133.0*16T	140	168	

1.Back-pulled collet

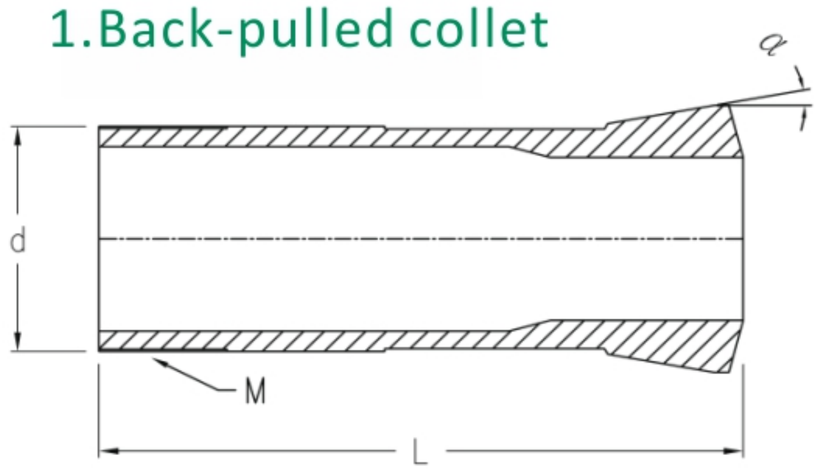

2.Front-mounted Collet

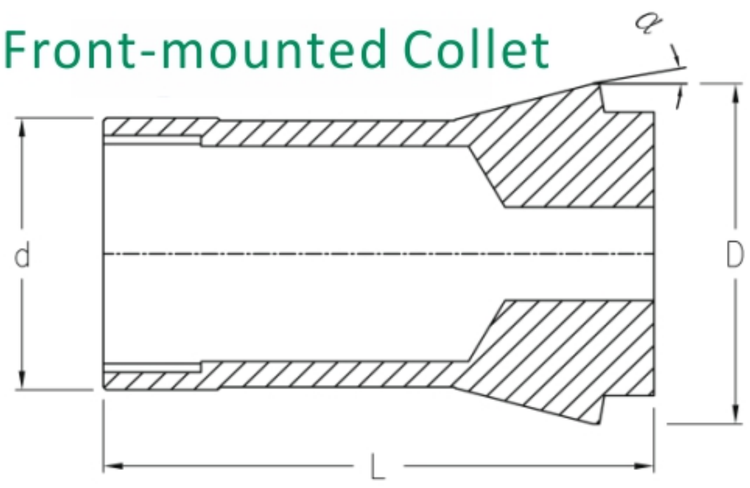

3.Precision rubber cylinder holder

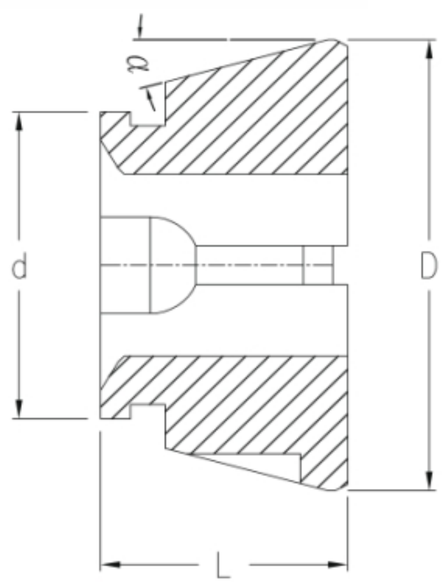

4.Replace collet for high speed rotary chuck

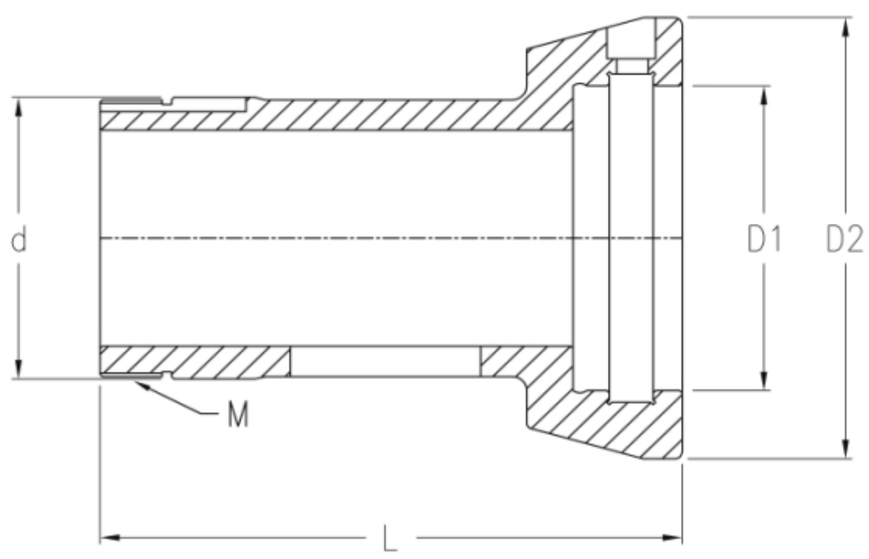

JAL Pneumatic Cylinder

- Open center air cylinder,saving cost of hydraulic equipment.
- Open center design allows bar parts gripping.
- Adavnce beating design:low temperature rising when operation.
- Low air leakage.
- Double piston design to offer high pulling force.(JA362/JA562)

Dimension and Specification

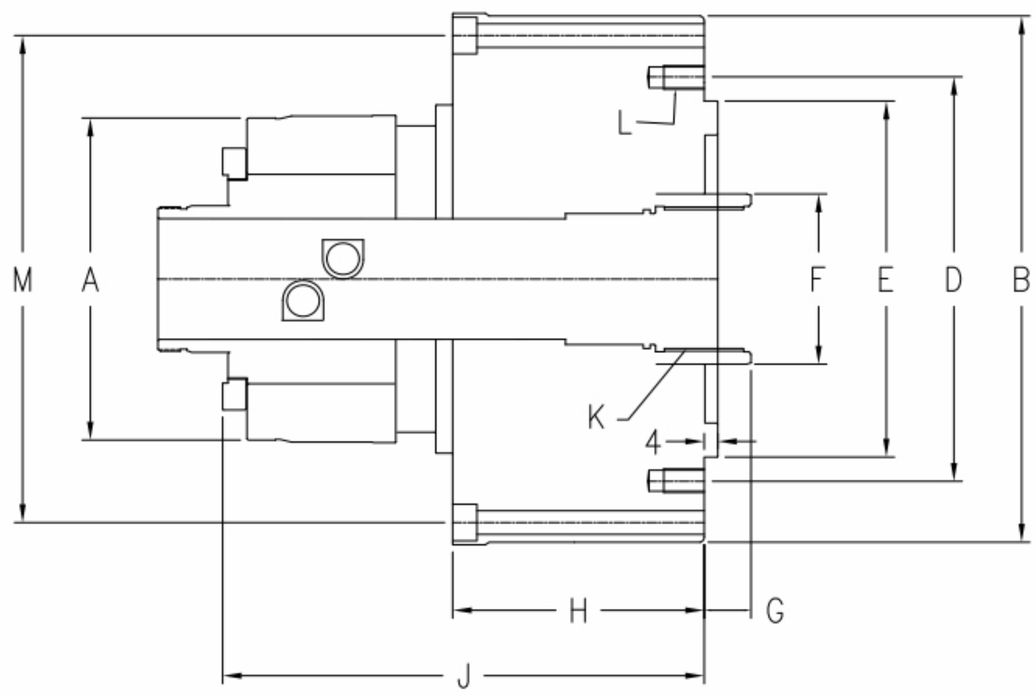

Model	JAL636	JA362
Piston	Single Piston	Double Piston
A	105 (4.13")	107 (4.21")
B	162 (6.38")	175 (6.89")
D (P.C.D.)	115 (4.53")	115 (4.53")
E	100 (3.94")	100 (3.94")
F	55 (2.17")	50 (1.97")
G	0-12 (0"-0.47")	-2.5-10 (-0.10"-0.39")
H	58 (2.28")	101 (3.98")
J	120 (4.72")	165 (6.50")
K (for Drawtube)	M42xP1.5	M42xP1.5
L	6-M10	6-M10
M (P.C.D.)	147 (5.79") 8H-M6	N/A
Through Hole	36mm (1.42")	36mm (1.42")
Operating Pressure	2-8kg/cm^2 (29-114psi)	2-8kg/cm^2 (29-114psi)
Max. RPM	3200	3600
Piston Stroke	12mm (0.47")	12mm (0.47")
Piston Area	123cm^2 (19.1in^2)	287cm^2 (44.5in^2)
Pulling Force	775kgf@7kg/cm^2 (1705lbf@100psi)	1810kgf@7kg/cm^2 (3980lbf@100psi)
Net Weight	7.2kgs (15.8lbs)	9.2kgs (20.3lbs)

DONGGUAN DERUI PRECISION MACHINERY CO.LTD

Tel:0769-83238520/0769-81103466

Fax:86-0769-81103455

Mobile/wechat:+86 18925547774

E-mail:derui_sales05@163.com

https://dr-chuck.en.alibaba.com

Address: no.136, shida road, liaobu town, dongguan city, guangdong province, China